Auto Power Plug with Green LED

171-R1326-EX

KOBICONN

Dimensions: mm (in.)

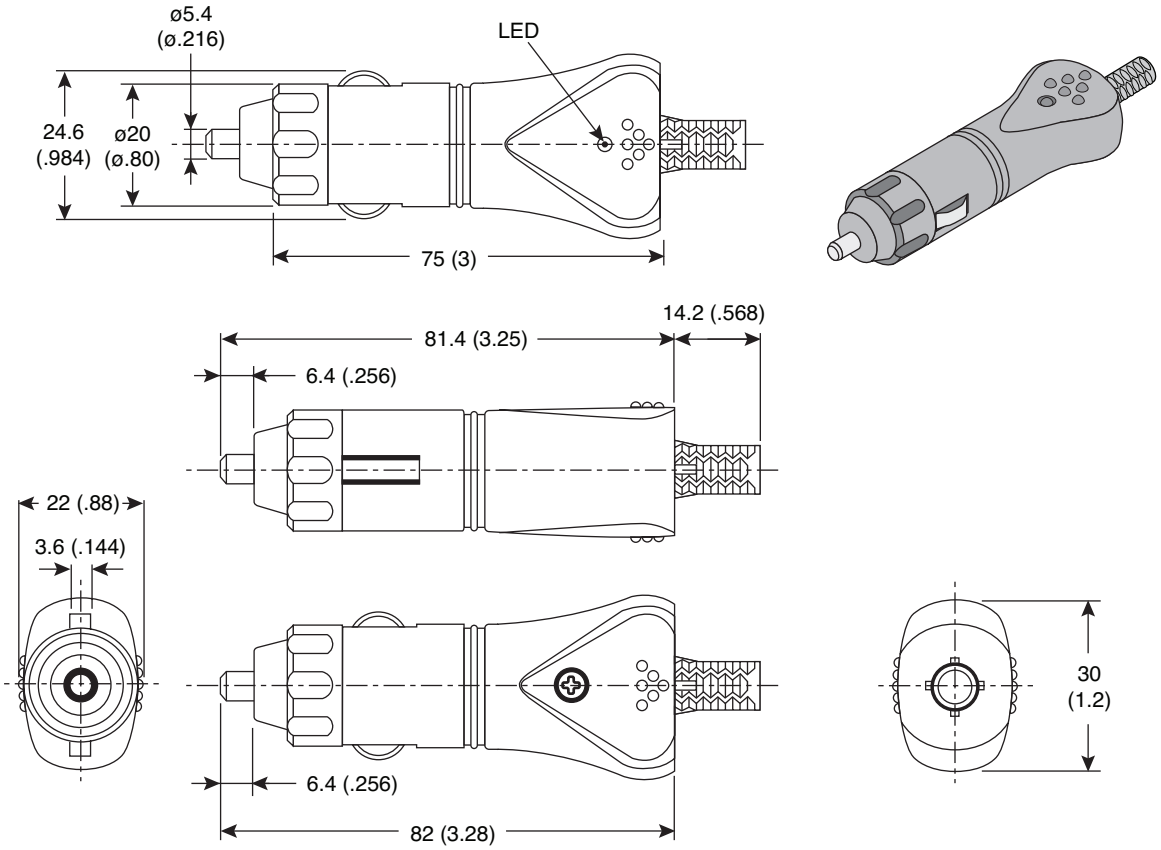

Specifications	
Rating:	12V, Max. 8A
Contact resistance:	100mΩ Max.
Insulation resistance:	DC 500V 100MΩ Min.
Voltage breakdown:	AC 1000V 1 Minute
Operating temperature:	-20°C ~ 65°C
Fuse:	8A .25 x 1.25
Resistor:	1/4W±5% 680Ω
RoHS Compliant by exemption	

Auto Power Plug with Green LED
171-R1326-EX

Date Last Revised: 6-4-07

Available from Mouser Electronics
1-800-346-6873 / www.mouser.com

KC-301155

Specifications are subject to change without notice. No liability or warranty implied by this information. Environmental compliance based on producer documentation.