REV.	ECN NO.	DATE	SIGN	DESCRIPTION
B	LE3-6C0068	2006/11/20	Cloud	Modify the Note and dimension.

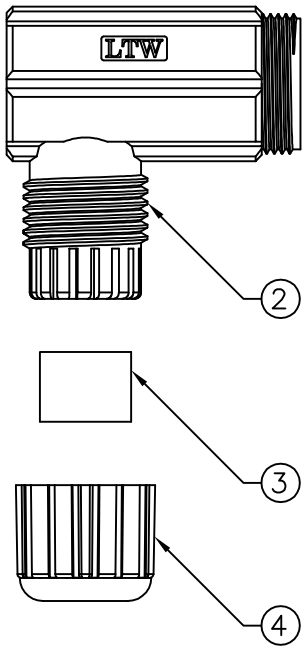

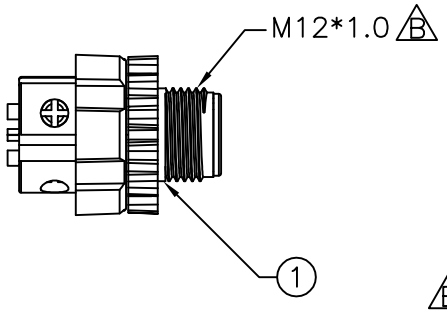

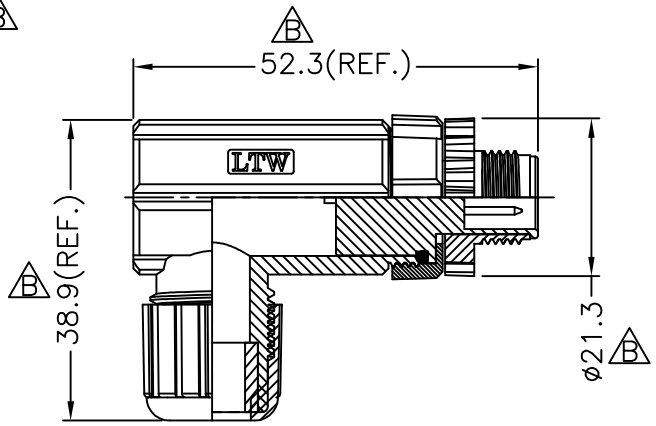

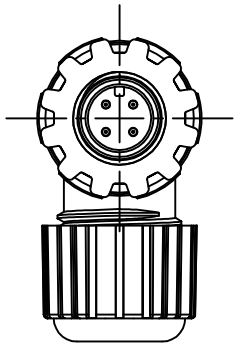

Conn.

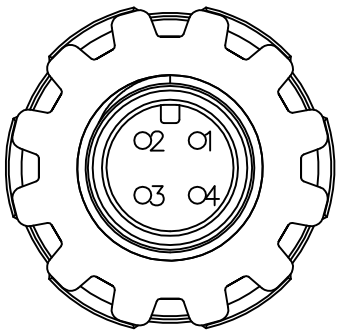

Pin Assignments
Front View

ALTW
DCC. DEPT.
CONFIDENTIAL
2006.12.15
ISSUED

ALTW
CONFIDENTIAL
2006.12.05
R&D DEPT.

Note:
* Waterproof Rate : IP67
* Connector:Black,Nylon+GF
* Pin:Copper Alloy,Gold Plated
* O-Ring:Black,EPDM.
* Holder:Black,Nylon+GF
* Clamp Ring:Black,Nylon 66.
* Gasket:Black,EPDM.
* Sealing Nut:Black,Nylon 66.
* Nut:Black,Nylon+GF
* Seals For Cable OD ø4.5mm~ø6.0mm
* Temperature Range: -40°C~+85°C.

UNIT:mm	TITLE: M12 Screw In Male Conn 4Pin A Code	Amphenol LTW 安費諾亮泰企業股份有限公司	ITEM NO: 12P-04BMMB-SR7001	DRAWN BY: Cloud	DATE: 2006/12/05
TOLERANCE .X ±0.25 .XX ±0.1 .XXX ±0.05 ANGLES ±1°	SCALE: Free / SHEET 1 OF 1		DWG NO: 12P-04BMMB-SR7001	CHECKED BY: Simon Hung	DATE: 2006/12/07
	REV. B / SIZE A4 / QC :Inspection Item		CUSTOMER: ALTW	APPROVED BY: Max	DATE: 2006/12/12

THIS DOCUMENT IS SUBJECT TO CHANGE WITHOUT NOTICE. IT IS CONFIDENTIAL AND A PROPERTY OF Amphenol LTW. DISCLOSURE TO THIRD PARTY HAS TO BE AUTHORIZED BY Amphenol LTW.