Temperature Sensor ICs Thermostat Output with Variable Detection Temperature

BDExxx0G Series

General Description

BDExxx0G series are low quiescent current (16µA), high accuracy thermostat (temperature switch) ICs. This IC has a built-in temperature sensor, reference voltage regulator, D/A converter, and comparator. The IC's OS terminal changes its logic state upon detection of temperature. An open-drain output (Active-L) is available in this series.

Features

- ±5°C-step Selectable Detection Temperature with Control.
- ESD Rating of 8kV (HBM)
- Excellent Ripple Rejection Characteristic

Applications

Thermal Protection for Electrical Equipment (Notebook PC, Cellular phone, FPD-TV, etc.). Fan Control for Thermal Management.

Key Specifications

- Power Supply Voltage Range: 2.9V to 5.5V
- Supply Current: 16.0µA (Typ)
- Detection Temperature Range: +55°C to +115°C
- Detection Temperature Accuracy: ±4.0°C (Max) @Ta=-20°C to +115°C
- Hysteresis Temperature: 10°C (Typ)
- High Accuracy Analog Output: ±3.5°C (Max) @Ta=30°C
- Analog Output Temperature Sensitivity: -10.68mV/°C (Typ)
- Operating Temperature Range: -30°C to +130°C

Package

W(Typ) x D(Typ) x H(Max)

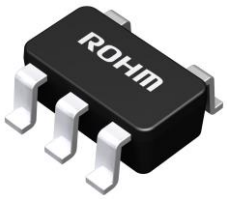

SSOP5
2.90mm x 2.80mm x 1.25mm

Block Diagram and Pin Configuration

TOP VIEW

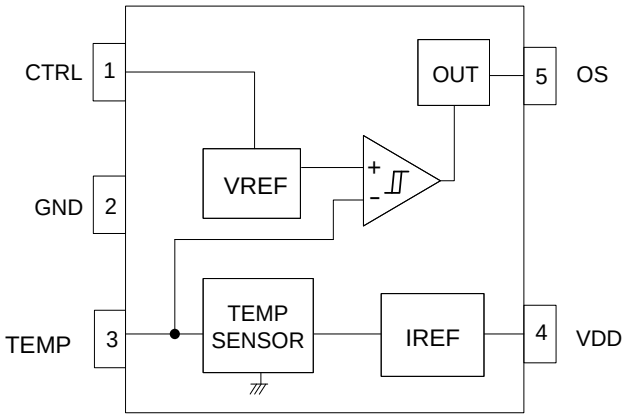

Pin Descriptions

Pin No.	Pin Name	Function	Comment
1	CTRL	Detection Temperature Setting	Refer to page 9/11 for the temperature settings. (Temperature / Output Format Table)
2	GND	Ground	
3	TEMP	Output voltage in inverse proportion to the temperature (Typ -10.68mV/°C)	Set to Open state or connect to a high input impedance node (over 10MΩ).
4	VDD	Power Supply Voltage	
5	OS	Digital Thermostat Output	Open-Drain type. Use pull-up resistor of over 10kΩ.

○Product structure : Silicon monolithic integrated circuit ○This product has no designed protection against radioactive rays

© 2015 ROHM Co., Ltd. All rights reserved.

Absolute Maximum Ratings (Ta = 25°C)

Parameters	Symbol	Limit	Unit
Power Supply Voltage	V_{DD}	-0.3 to +7.0 (Note 1)	V
Input Voltage (CTRL)	V_{IN}	-0.3 to +V_{DD}+0.3	V
Input Current (CTRL)	I_{IN}	-1.0, +0.1	mA
OS Terminal Voltage	V_{OS}	-0.3 to +7.0	V
OS Terminal Current	I_{OS}	5.0	mA
Power Dissipation	Pd	0.54 (Note 2)	W
Storage Temperature Range	Tstg	-55 to +150	°C

(Note 1) However, not exceeding Pd.
(Note 2) When mounted on ROHM standard board, derate by 5.40mW/°C for Ta higher than 25 °C.
Caution: Operating the IC over the absolute maximum ratings may damage the IC. The damage can either be a short circuit between pins or an open circuit between pins and the internal circuitry. Therefore, it is important to consider circuit protection measures, such as adding a fuse, in case the IC is operated over the absolute maximum ratings.

Recommended Operating Conditions

Parameters	Symbol	Min	Typ	Max	Unit
Power Supply Voltage	V_{DD}	2.9	3.0	5.5	V
Operating Temperature Range	Topr	-30	-	+130	°C

Electrical Characteristics (Unless otherwise specified, V_{DD} = 3.0V, Ta = 25°C)

Parameter	Symbol	Limits			Unit	Conditions
		Min	Typ	Max		
Supply Current	I_{DD}	-	16.0	20.0	µA	V_{CTRL} = 3.0V
Analog Output						
TEMP Output Voltage	V_{TEMP}	1.716	1.753	1.790	V	Ta = 30°C
TEMP Temperature Sensitivity	V_{SE}	-10.28	-10.68	-11.08	mV/°C	Ta = -30°C to +100°C
TEMP Load Regulation	ΔV_{TEMPRL}	-	-	1	mV	difference of I_{OUT} : 0µA / 2µA
OS Output Open Drain						
OS Leakage Current	I_L	-	-	1.0	µA	V_{OS} = 5.0V
OS Output Voltage	V_{OL}	-	-	0.4	V	I_{OS} = 1.2mA
CTRL						
Input L Voltage	V_{IL}	GND	-	0.6	V	
Input H Voltage	V_{IH}	2.4	-	V_{DD}	V	

(Note) Radiation hardiness is not designed.

Temperature Accuracy (Unless otherwise specified, V_{DD} = 3.0V)

Parameters	Symbol	Limit			Unit	Conditions
		Min	Typ	Max		
Thermostat (Temperature Switch)						
Detection Temperature Accuracy	Tacc	-	-	±4.0	°C	Ta = -20°C to +115°C
Detection Temperature Hysteresis	Thys	7.5	10.0	12.5	°C	
Analog Output						
TEMP Temperature Accuracy	T_{TEMP}	-	-	±3.5	°C	Ta = 30°C

© 2015 ROHM Co., Ltd. All rights reserved.

Typical Performance Curves

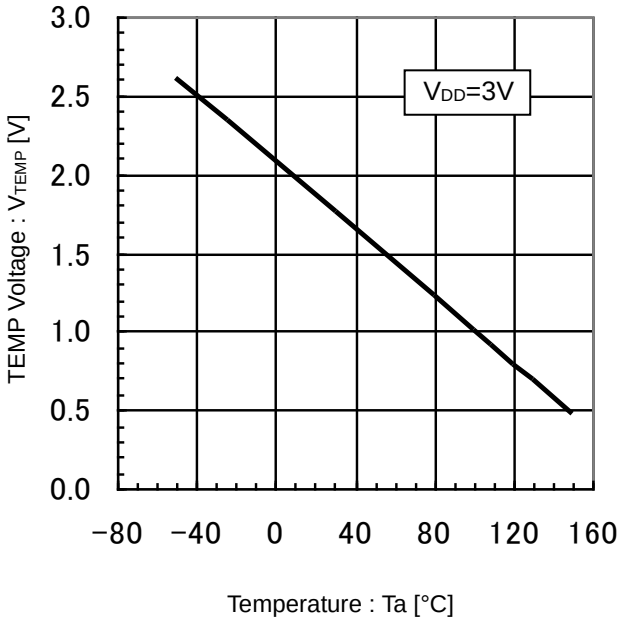

Figure 1. TEMP Voltage vs Temperature
(Temperature Sensitivity)

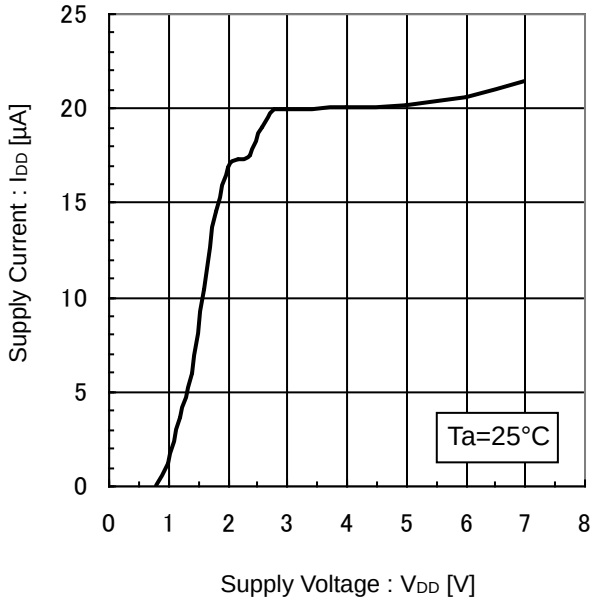

Figure 2. Supply Current vs Supply Voltage

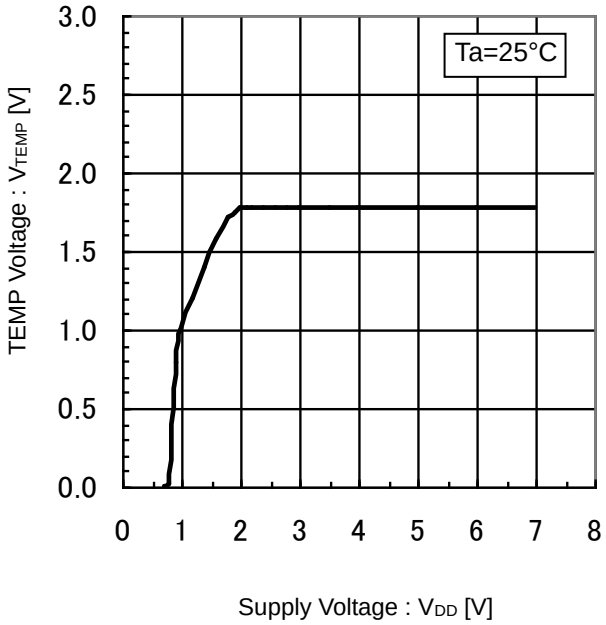

Figure 3. TEMP Voltage vs Supply Voltage

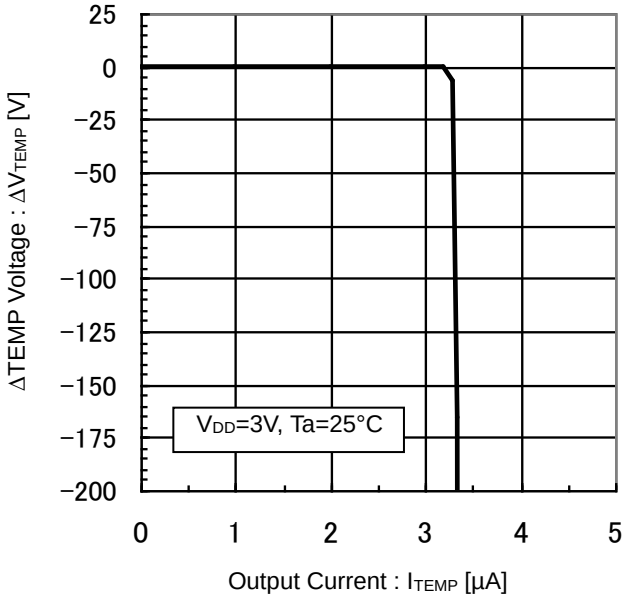

Figure 4. TEMP Voltage vs Output Current

© 2015 ROHM Co., Ltd. All rights reserved.

Typical Performance Curves – continued

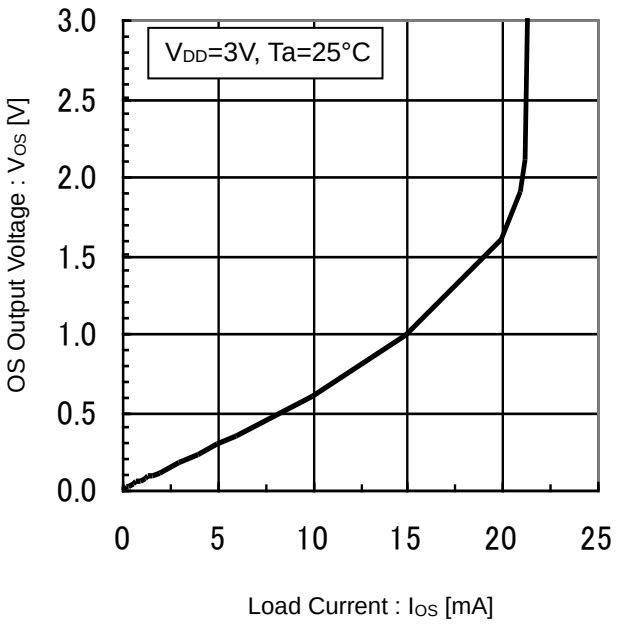

Figure 5. OS Output Voltage vs Load Current

© 2015 ROHM Co., Ltd. All rights reserved.

Application Information

1. **Functional Diagram** (ex. Detection Temperature 110°C)

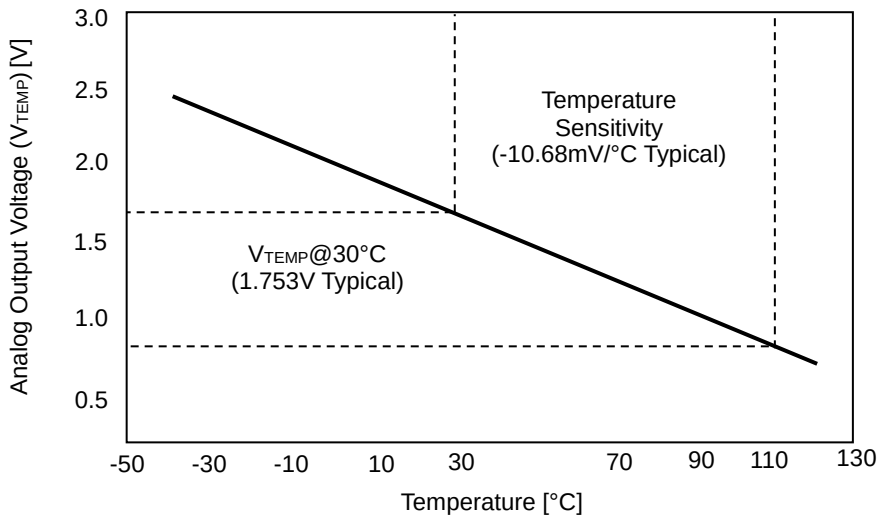

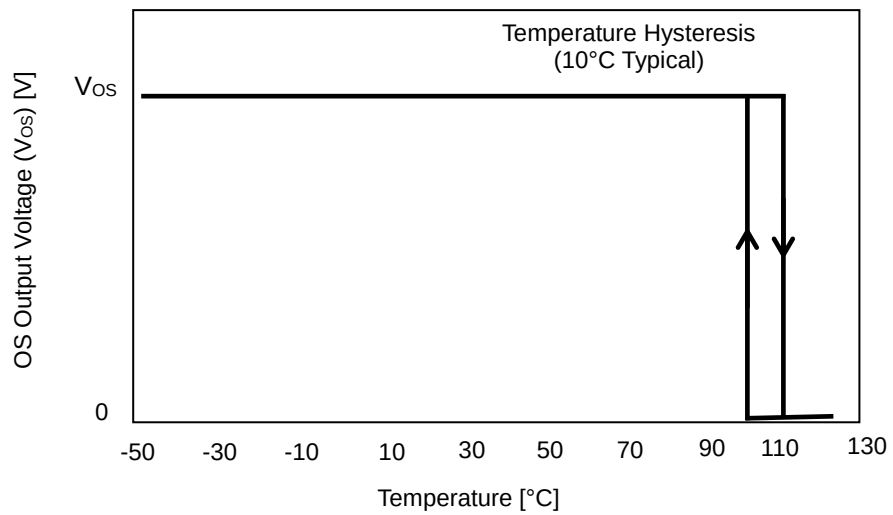

© 2015 ROHM Co., Ltd. All rights reserved.

I/O Equivalent Circuits

CTRL	OS
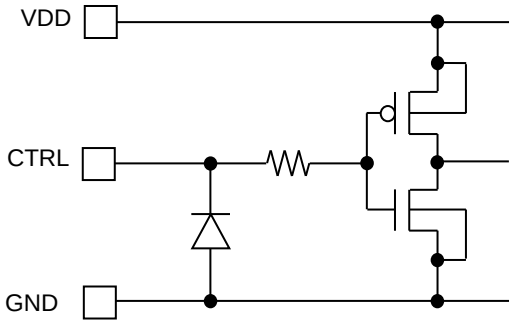	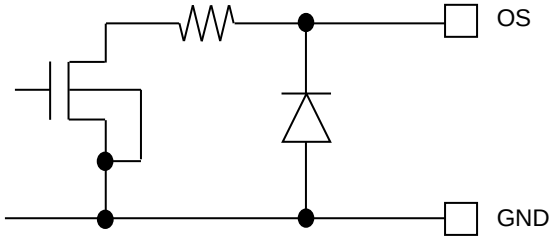 Use pull-up resistor of more than 10kΩ.
TEMP	
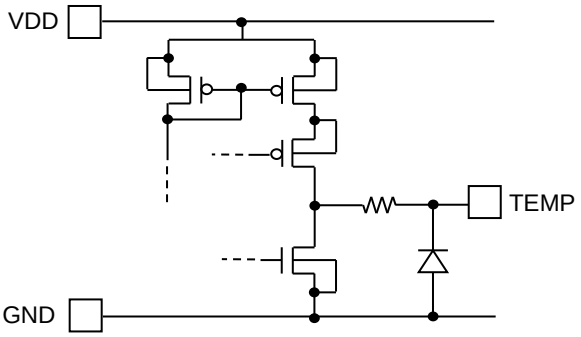 Please do not connect a pull-down resistor.	

© 2015 ROHM Co., Ltd. All rights reserved.

Operational Notes

1. **Reverse Connection of Power Supply**
   Connecting the power supply in reverse polarity can damage the IC. Take precautions against reverse polarity when connecting the power supply, such as mounting an external diode between the power supply and the IC's power supply pins.

2. **Power Supply Lines**
   Design the PCB layout pattern to provide low impedance supply lines. Separate the ground and supply lines of the digital and analog blocks to prevent noise in the ground and supply lines of the digital block from affecting the analog block. Furthermore, connect a capacitor to ground at all power supply pins. Consider the effect of temperature and aging on the capacitance value when using electrolytic capacitors.

3. **Ground Voltage**
   Ensure that no pins are at a voltage below that of the ground pin at any time, even during transient condition.

4. **Ground Wiring Pattern**
   When using both small-signal and large-current ground traces, the two ground traces should be routed separately but connected to a single ground at the reference point of the application board to avoid fluctuations in the small-signal ground caused by large currents. Also ensure that the ground traces of external components do not cause variations on the ground voltage. The ground lines must be as short and thick as possible to reduce line impedance.

5. **Thermal Consideration**
   Should by any chance the power dissipation rating be exceeded the rise in temperature of the chip may result in deterioration of the properties of the chip. In case of exceeding this absolute maximum rating, increase the board size and copper area to prevent exceeding the Pd rating.

6. **Recommended Operating Conditions**
   These conditions represent a range within which the expected characteristics of the IC can be approximately obtained. The electrical characteristics are guaranteed under the conditions of each parameter.

7. **Inrush Current**
   When power is first supplied to the IC, it is possible that the internal logic may be unstable and inrush current may flow instantaneously due to the internal powering sequence and delays, especially if the IC has more than one power supply. Therefore, give special consideration to power coupling capacitance, power wiring, width of ground wiring, and routing of connections.

8. **Operation Under Strong Electromagnetic Field**
   Operating the IC in the presence of a strong electromagnetic field may cause the IC to malfunction.

9. **Testing on Application Boards**
   When testing the IC on an application board, connecting a capacitor directly to a low-impedance output pin may subject the IC to stress. Always discharge capacitors completely after each process or step. The IC's power supply should always be turned off completely before connecting or removing it from the test setup during the inspection process. To prevent damage from static discharge, ground the IC during assembly and use similar precautions during transport and storage.

10. **Inter-pin Short and Mounting Errors**
    Ensure that the direction and position are correct when mounting the IC on the PCB. Incorrect mounting may result in damaging the IC. Avoid nearby pins being shorted to each other especially to ground, power supply and output pin. Inter-pin shorts could be due to many reasons such as metal particles, water droplets (in very humid environment) and unintentional solder bridge deposited in between pins during assembly to name a few.

© 2015 ROHM Co., Ltd. All rights reserved.

Operational Notes – continued

11. Unused Input Pins

Input pins of an IC are often connected to the gate of a MOS transistor. The gate has extremely high impedance and extremely low capacitance. If left unconnected, the electric field from the outside can easily charge it. The small charge acquired in this way is enough to produce a significant effect on the conduction through the transistor and cause unexpected operation of the IC. So unless otherwise specified, unused input pins should be connected to the power supply or ground line.

12. Regarding the Input Pin of the IC

This monolithic IC contains P+ isolation and P substrate layers between adjacent elements in order to keep them isolated. P-N junctions are formed at the intersection of the P layers with the N layers of other elements, creating a parasitic diode or transistor. For example (refer to figure below):

When GND > Pin A and GND > Pin B, the P-N junction operates as a parasitic diode.
When GND > Pin B, the P-N junction operates as a parasitic transistor.

Parasitic diodes inevitably occur in the structure of the IC. The operation of parasitic diodes can result in mutual interference among circuits, operational faults, or physical damage. Therefore, conditions that cause these diodes to operate, such as applying a voltage lower than the GND voltage to an input pin (and thus to the P substrate) should be avoided.

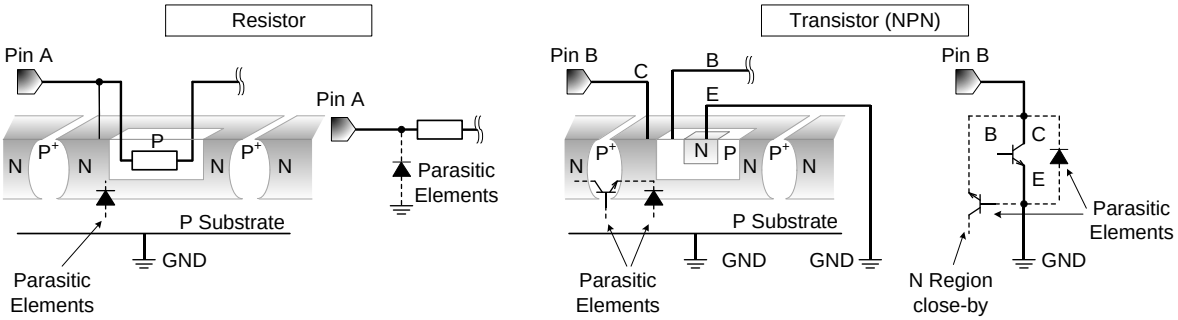

Figure 6. Example of monolithic IC structure

© 2015 ROHM Co., Ltd. All rights reserved.

Ordering Information

B D E x x x 0 G - T R

Detect Temp.
060: 60°C
070: 70°C
080: 80°C
090: 90°C
100: 100°C
110: 110°C

Output Format
0 : Active-L

Package
G:SSOP5

Packaging and forming specification
TR: Embossed tape and reel
(SSOP5)

Lineup

Temperature / Output Format Table
CTRL status description (L : Low, O : Open, H : High)

Product Name	Detection Temperature (°C)			OS Output Format	
	CTRL				
	L	H	O		
BDE1100G	105	110	115	Open-Drain	Active-L
BDE1000G	95	100	105	Open-Drain	Active-L
BDE0900G	85	90	95	Open-Drain	Active-L
BDE0800G	75	80	85	Open-Drain	Active-L
BDE0700G	65	70	75	Open-Drain	Active-L
BDE0600G	55	60	65	Open-Drain	Active-L

Marking Diagram

SSOP5 (TOP VIEW)

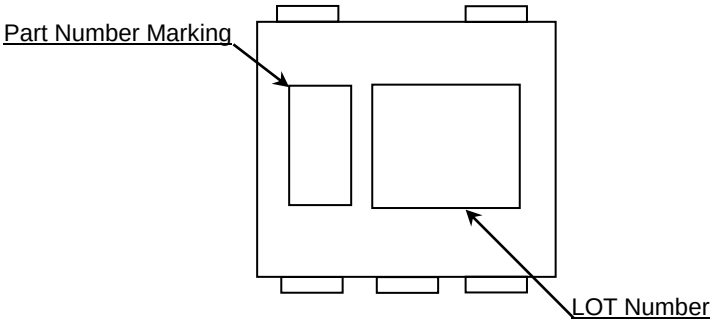

Orderable Part Number	**Part Number Marking**
BDE1100G-TR	eB
BDE1000G-TR	eC
BDE0900G-TR	eD
BDE0800G-TR	eE
BDE0700G-TR	eF
BDE0600G-TR	eG

© 2015 ROHM Co., Ltd. All rights reserved.

Physical Dimension, Tape and Reel Information

Package Name	SSOP5

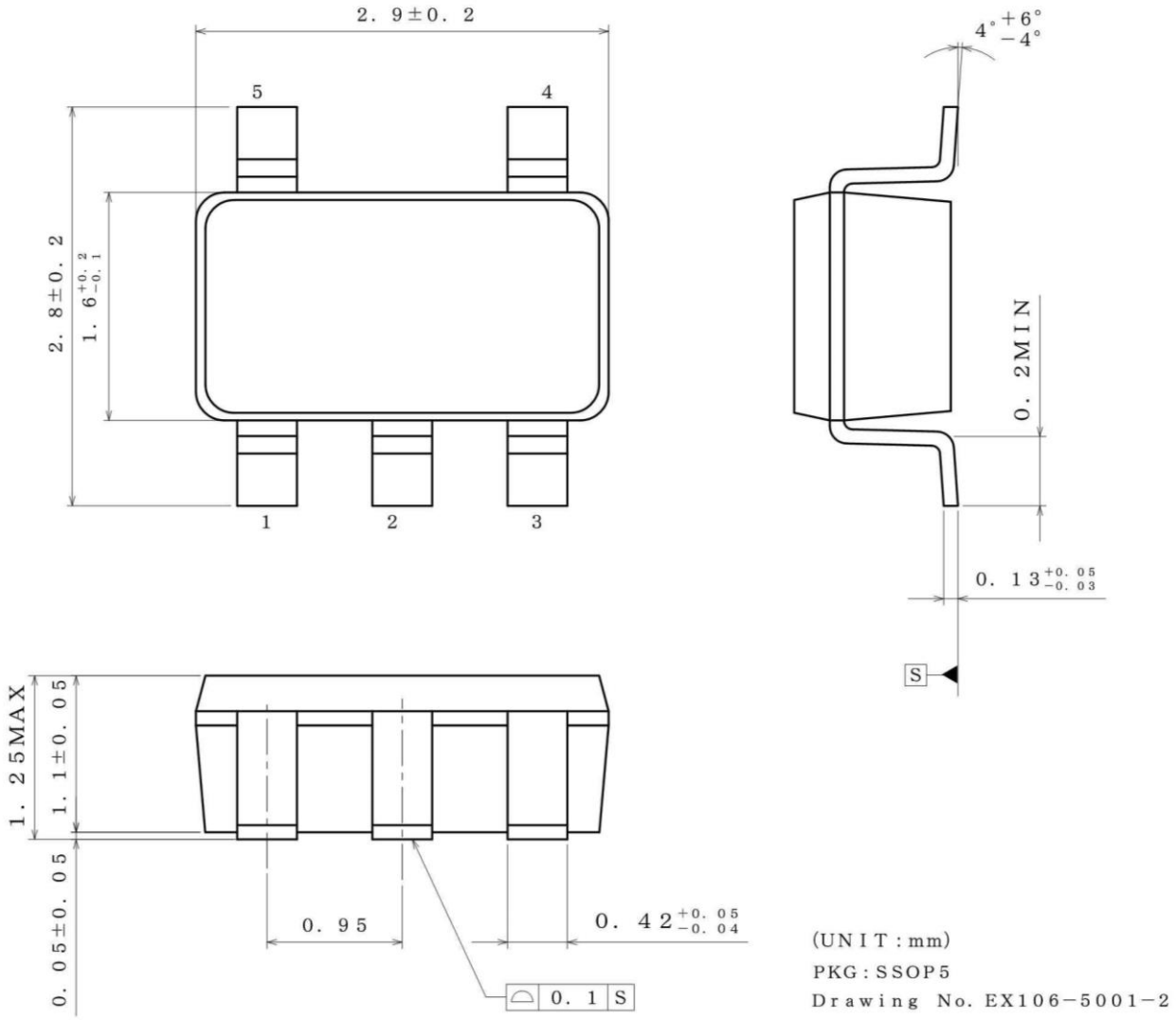

< Tape and Reel Information >

Tape	Embossed carrier tape
Quantity	3000pcs
Direction of feed	TR (The direction is the 1pin of product is at the upper right when you hold reel on the left hand and you pull out the tape on the right hand)

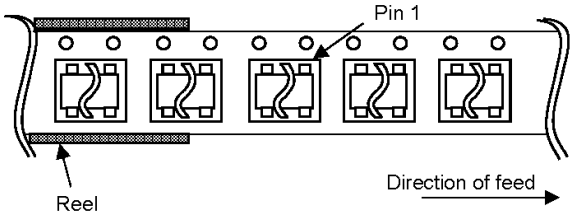

© 2015 ROHM Co., Ltd. All rights reserved.

Revision History

Date	Revision	Changes
06.Nov.2015	001	New Release

© 2015 ROHM Co., Ltd. All rights reserved.

Notice

Precaution on using ROHM Products

1. Our Products are designed and manufactured for application in ordinary electronic equipments (such as AV equipment, OA equipment, telecommunication equipment, home electronic appliances, amusement equipment, etc.). If you intend to use our Products in devices requiring extremely high reliability (such as medical equipment (Note 1), transport equipment, traffic equipment, aircraft/spacecraft, nuclear power controllers, fuel controllers, car equipment including car accessories, safety devices, etc.) and whose malfunction or failure may cause loss of human life, bodily injury or serious damage to property ("Specific Applications"), please consult with the ROHM sales representative in advance. Unless otherwise agreed in writing by ROHM in advance, ROHM shall not be in any way responsible or liable for any damages, expenses or losses incurred by you or third parties arising from the use of any ROHM's Products for Specific Applications.

(Note1) Medical Equipment Classification of the Specific Applications

JAPAN	USA	EU	CHINA
CLASSⅢ	CLASSⅢ	CLASSⅡb	CLASSⅢ
CLASSⅣ		CLASSⅢ	

2. ROHM designs and manufactures its Products subject to strict quality control system. However, semiconductor products can fail or malfunction at a certain rate. Please be sure to implement, at your own responsibilities, adequate safety measures including but not limited to fail-safe design against the physical injury, damage to any property, which a failure or malfunction of our Products may cause. The following are examples of safety measures:
   [a] Installation of protection circuits or other protective devices to improve system safety
   [b] Installation of redundant circuits to reduce the impact of single or multiple circuit failure

3. Our Products are designed and manufactured for use under standard conditions and not under any special or extraordinary environments or conditions, as exemplified below. Accordingly, ROHM shall not be in any way responsible or liable for any damages, expenses or losses arising from the use of any ROHM's Products under any special or extraordinary environments or conditions. If you intend to use our Products under any special or extraordinary environments or conditions (as exemplified below), your independent verification and confirmation of product performance, reliability, etc, prior to use, must be necessary:
   [a] Use of our Products in any types of liquid, including water, oils, chemicals, and organic solvents
   [b] Use of our Products outdoors or in places where the Products are exposed to direct sunlight or dust
   [c] Use of our Products in places where the Products are exposed to sea wind or corrosive gases, including Cl_2, H_2S, NH_3, SO_2, and NO_2
   [d] Use of our Products in places where the Products are exposed to static electricity or electromagnetic waves
   [e] Use of our Products in proximity to heat-producing components, plastic cords, or other flammable items
   [f] Sealing or coating our Products with resin or other coating materials
   [g] Use of our Products without cleaning residue of flux (even if you use no-clean type fluxes, cleaning residue of flux is recommended); or Washing our Products by using water or water-soluble cleaning agents for cleaning residue after soldering
   [h] Use of the Products in places subject to dew condensation

4. The Products are not subject to radiation-proof design.

5. Please verify and confirm characteristics of the final or mounted products in using the Products.

6. In particular, if a transient load (a large amount of load applied in a short period of time, such as pulse. is applied, confirmation of performance characteristics after on-board mounting is strongly recommended. Avoid applying power exceeding normal rated power; exceeding the power rating under steady-state loading condition may negatively affect product performance and reliability.

7. De-rate Power Dissipation depending on ambient temperature. When used in sealed area, confirm that it is the use in the range that does not exceed the maximum junction temperature.

8. Confirm that operation temperature is within the specified range described in the product specification.

9. ROHM shall not be in any way responsible or liable for failure induced under deviant condition from what is defined in this document.

Precaution for Mounting / Circuit board design

1. When a highly active halogenous (chlorine, bromine, etc.) flux is used, the residue of flux may negatively affect product performance and reliability.

2. In principle, the reflow soldering method must be used on a surface-mount products, the flow soldering method must be used on a through hole mount products. If the flow soldering method is preferred on a surface-mount products, please consult with the ROHM representative in advance.

For details, please refer to ROHM Mounting specification

© 2015 ROHM Co., Ltd. All rights reserved.

Precautions Regarding Application Examples and External Circuits

1. If change is made to the constant of an external circuit, please allow a sufficient margin considering variations of the characteristics of the Products and external components, including transient characteristics, as well as static characteristics.

2. You agree that application notes, reference designs, and associated data and information contained in this document are presented only as guidance for Products use. Therefore, in case you use such information, you are solely responsible for it and you must exercise your own independent verification and judgment in the use of such information contained in this document. ROHM shall not be in any way responsible or liable for any damages, expenses or losses incurred by you or third parties arising from the use of such information.

Precaution for Electrostatic

This Product is electrostatic sensitive product, which may be damaged due to electrostatic discharge. Please take proper caution in your manufacturing process and storage so that voltage exceeding the Products maximum rating will not be applied to Products. Please take special care under dry condition (e.g. Grounding of human body / equipment / solder iron, isolation from charged objects, setting of Ionizer, friction prevention and temperature / humidity control).

Precaution for Storage / Transportation

1. Product performance and soldered connections may deteriorate if the Products are stored in the places where:
   [a] the Products are exposed to sea winds or corrosive gases, including Cl2, H2S, NH3, SO2, and NO2
   [b] the temperature or humidity exceeds those recommended by ROHM
   [c] the Products are exposed to direct sunshine or condensation
   [d] the Products are exposed to high Electrostatic

2. Even under ROHM recommended storage condition, solderability of products out of recommended storage time period may be degraded. It is strongly recommended to confirm solderability before using Products of which storage time is exceeding the recommended storage time period.

3. Store / transport cartons in the correct direction, which is indicated on a carton with a symbol. Otherwise bent leads may occur due to excessive stress applied when dropping of a carton.

4. Use Products within the specified time after opening a humidity barrier bag. Baking is required before using Products of which storage time is exceeding the recommended storage time period.

Precaution for Product Label

QR code printed on ROHM Products label is for ROHM's internal use only.

Precaution for Disposition

When disposing Products please dispose them properly using an authorized industry waste company.

Precaution for Foreign Exchange and Foreign Trade act

Since concerned goods might be fallen under listed items of export control prescribed by Foreign exchange and Foreign trade act, please consult with ROHM in case of export.

Precaution Regarding Intellectual Property Rights

1. All information and data including but not limited to application example contained in this document is for reference only. ROHM does not warrant that foregoing information or data will not infringe any intellectual property rights or any other rights of any third party regarding such information or data.

2. ROHM shall not have any obligations where the claims, actions or demands arising from the combination of the Products with other articles such as components, circuits, systems or external equipment (including software).

3. No license, expressly or implied, is granted hereby under any intellectual property rights or other rights of ROHM or any third parties with respect to the Products or the information contained in this document. Provided, however, that ROHM will not assert its intellectual property rights or other rights against you or your customers to the extent necessary to manufacture or sell products containing the Products, subject to the terms and conditions herein.

Other Precaution

1. This document may not be reprinted or reproduced, in whole or in part, without prior written consent of ROHM.

2. The Products may not be disassembled, converted, modified, reproduced or otherwise changed without prior written consent of ROHM.

3. In no event shall you use in any way whatsoever the Products and the related technical information contained in the Products or this document for any military purposes, including but not limited to, the development of mass-destruction weapons.

4. The proper names of companies or products described in this document are trademarks or registered trademarks of ROHM, its affiliated companies or third parties.

© 2015 ROHM Co., Ltd. All rights reserved.

General Precaution

1. Before you use our Products, you are requested to carefully read this document and fully understand its contents. ROHM shall not be in any way responsible or liable for failure, malfunction or accident arising from the use of any ROHM's Products against warning, caution or note contained in this document.

2. All information contained in this document is current as of the issuing date and subject to change without any prior notice. Before purchasing or using ROHM's Products, please confirm the latest information with a ROHM sales representative.

3. The information contained in this document is provided on an "as is" basis and ROHM does not warrant that all information contained in this document is accurate and/or error-free. ROHM shall not be in any way responsible or liable for any damages, expenses or losses incurred by you or third parties resulting from inaccuracy or errors of or concerning such information.

© 2015 ROHM Co., Ltd. All rights reserved.