TDK

January 2015

Inductors for Decoupling Circuits

Wound Ferrite

NLCV-PF Series

NLCV32-PF Type

NLCV32-PF	**3225 [1210 inch]***

*** Dimensions Code JIS[EIA]**

REMINDERS FOR USING THESE PRODUCTS

Before using these products, be sure to request the delivery specifications.

SAFETY REMINDERS

Please pay sufficient attention to the warnings for safe designing when using these products.

⚠ REMINDERS

- The storage period is less than 6 months. Be sure to follow the storage conditions (Temperature: 5 to 40°C, Humidity: 10 to 75% RH or less).
  If the storage period elapses, the soldering of the terminal electrodes may deteriorate.
- Do not use or store in locations where there are conditions such as gas corrosion (salt, acid, alkali, etc.).
- Before soldering, be sure to preheat components.
  The preheating temperature should be set so that the temperature difference between the solder temperature and chip temperature does not exceed 150°C.
- Soldering corrections after mounting should be within the range of the conditions determined in the specifications.
  If overheated, a short circuit, performance deterioration, or lifespan shortening may occur.
- When embedding a printed circuit board where a chip is mounted to a set, be sure that residual stress is not given to the chip due to the overall distortion of the printed circuit board and partial distortion such as at screw tightening portions.
- Self heating (temperature increase) occurs when the power is turned ON, so the tolerance should be sufficient for the set thermal design.
- Carefully lay out the coil for the circuit board design of the non-magnetic shield type.
  A malfunction may occur due to magnetic interference.
- Use a wrist band to discharge static electricity in your body through the grounding wire.
- Do not expose the products to magnets or magnetic fields.
- Do not use for a purpose outside of the contents regulated in the delivery specifications.
- The products listed on this catalog are intended for use in general electronic equipment (AV equipment, telecommunications equipment, home appliances, amusement equipment, computer equipment, personal equipment, office equipment, measurement equipment, industrial robots) under a normal operation and use condition.
  The products are not designed or warranted to meet the requirements of the applications listed below, whose performance and/or quality require a more stringent level of safety or reliability, or whose failure, malfunction or trouble could cause serious damage to society, person or property.
  If you intend to use the products in the applications listed below or if you have special requirements exceeding the range or conditions set forth in the each catalog, please contact us.

(1) Aerospace/Aviation equipment
(2) Transportation equipment (cars, electric trains, ships, etc.)
(3) Medical equipment
(4) Power-generation control equipment
(5) Atomic energy-related equipment
(6) Seabed equipment
(7) Transportation control equipment
(8) Public information-processing equipment
(9) Military equipment
(10) Electric heating apparatus, burning equipment
(11) Disaster prevention/crime prevention equipment
(12) Safety equipment
(13) Other applications that are not considered general-purpose applications

When designing your equipment even for general-purpose applications, you are kindly requested to take into consideration securing protection circuit/device or providing backup circuits in your equipment.

Inductors for Decoupling Circuits

Wound Ferrite

Product compatible with RoHS directive
Halogen-free
Compatible with lead-free solders

Overview of NLCV32-PF Type

FEATURES

○ Resin mold type wound inductor for decoupling circuits.

APPLICATION

○ Smart meters, AV equipment, xDSL, electronic devices for communications infrastructure such as mobile base stations, industrial equipment, other

PART NUMBER CONSTRUCTION

NLCV 32 T - 1R0 M - PF

Series name	L×W×H Dimensions (mm)		Packaging style		Inductance (μH)		Inductance tolerance		Internal code	
	32	3.2×2.5×2.2	T	Taping	1R0	1	K	±10%	PF	Compatible with the RoHS Directive, Exemption regulations apply
					100	10	M	±20%		
					101	100				

OPERATING TEMPERATURE RANGE, PACKAGE QUANTITY, PRODUCT WEIGHT

Type	Temperature range		Package quantity	Individual weight
	Operating temperature* (°C)	Storage temperature** (°C)	(pieces/reel)	(mg)
NLCV32-PF	–40 to +105	–40 to +105	2000	50

* Operating temperature range includes self-temperature rise.
** The Storage temperature range is for after the circuit board is mounted.

○ RoHS Directive Compliant Product: See the following for more details related to RoHS Directive compliant products. http://product.tdk.com/en/environment/rohs/
○ Halogen-free: Indicates that Cl content is less than 900ppm, Br content is less than 900ppm, and that the total Cl and Br content is less than 1500ppm.

⚠ Please be sure to request delivery specifications that provide further details on the features and specifications of the products for proper and safe use.
Please note that the contents may change without any prior notice due to reasons such as upgrading.

NLCV32-PF Type

RECOMMENDED REFLOW PROFILE

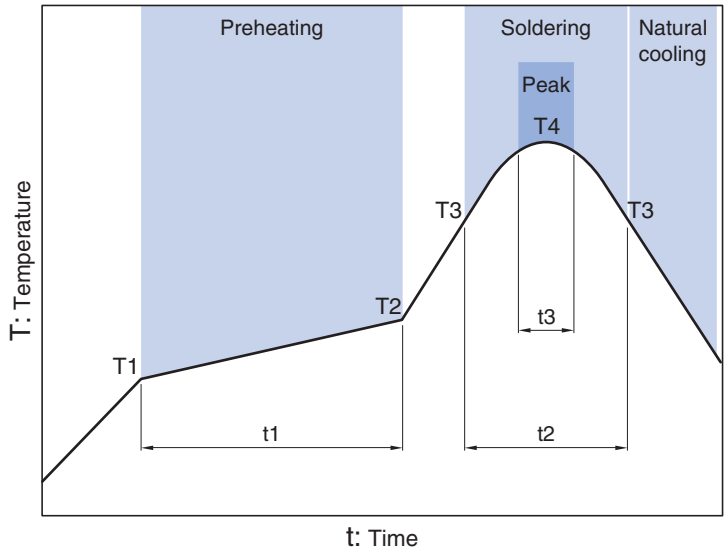

Preheating			Soldering		Peak	
Temp.		Time	Temp.	Time	Temp.	Time
T1	T2	t1	T3	t2	T4	t3
150°C	180°C	90 to 120s	230°C	40s	255°C	10s max.

⚠ Please be sure to request delivery specifications that provide further details on the features and specifications of the products for proper and safe use.
Please note that the contents may change without any prior notice due to reasons such as upgrading.

NLCV32-PF Type

SHAPE & DIMENSIONS

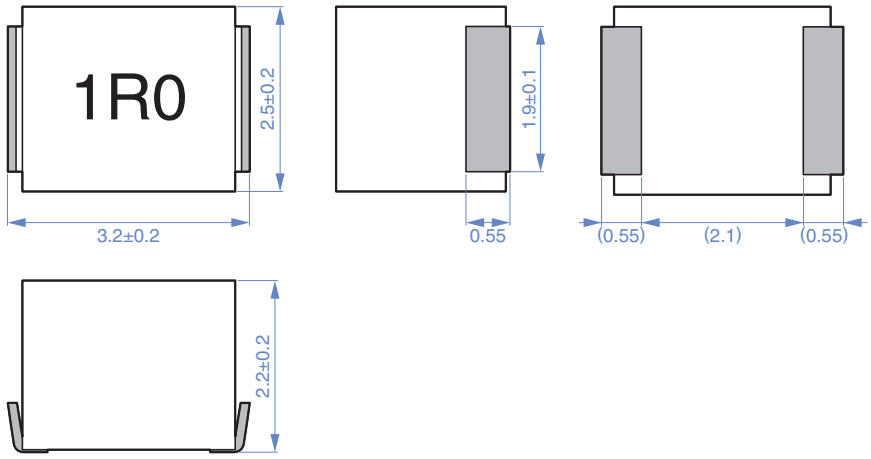

Dimensions in mm

RECOMMENDED LAND PATTERN

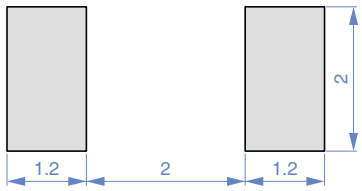

Dimensions in mm

⚠ Please be sure to request delivery specifications that provide further details on the features and specifications of the products for proper and safe use.
Please note that the contents may change without any prior notice due to reasons such as upgrading.

NLCV32-PF Type

■ELECTRICAL CHARACTERISTICS

□CHARACTERISTICS SPECIFICATION TABLE

L (μH)	Tolerance	Q ref.	L, Q measuring frequency (MHz)	Self-resonant frequency (MHz)min.	DC resistance (Ω)±30%	Rated current* (mA)max.	Part No.
1	±20%	10	7.96	100	0.06	1000	NLCV32T-1R0M-PF
1.5	±20%	10	7.96	80	0.11	830	NLCV32T-1R5M-PF
2.2	±20%	10	7.96	68	0.13	770	NLCV32T-2R2M-PF
3.3	±20%	10	7.96	54	0.16	690	NLCV32T-3R3M-PF
4.7	±20%	15	7.96	46	0.2	620	NLCV32T-4R7M-PF
6.8	±20%	15	7.96	38	0.27	530	NLCV32T-6R8M-PF
10	±10%	15	2.52	30	0.36	450	NLCV32T-100K-PF
15	±10%	15	2.52	26	0.56	370	NLCV32T-150K-PF
22	±10%	15	2.52	21	0.77	300	NLCV32T-220K-PF
33	±10%	15	2.52	17	1.1	240	NLCV32T-330K-PF
47	±10%	15	2.52	14	1.64	180	NLCV32T-470K-PF
68	±10%	15	2.52	12	2.8	140	NLCV32T-680K-PF
100	±10%	15	0.796	10	3.7	120	NLCV32T-101K-PF
150	±10%	20	0.796	8	6.1	100	NLCV32T-151K-PF
220	±10%	20	0.796	7	8.4	80	NLCV32T-221K-PF
330	±10%	20	0.796	6	12.3	70	NLCV32T-331K-PF

* Rated current: smaller value of either Idc1 or Idc2.
Idc1: When based on the inductance change rate (10% below the initial L value)
Idc2: When based on the temperature increase (Temperature increase of 20°C by self heating)

○ Measurement equipment

Measurement item	Product No.	Manufacturer
L, Q	4194A+16085A+16093B	Agilent Technologies
DC resistance	VP-2941A	Panasonic

＊ Equivalent measurement equipment may be used.

⚠ Please be sure to request delivery specifications that provide further details on the features and specifications of the products for proper and safe use.
Please note that the contents may change without any prior notice due to reasons such as upgrading.

NLCV32-PF Type

■ELECTRICAL CHARACTERISTICS

□L FREQUENCY CHARACTERISTICS GRAPH

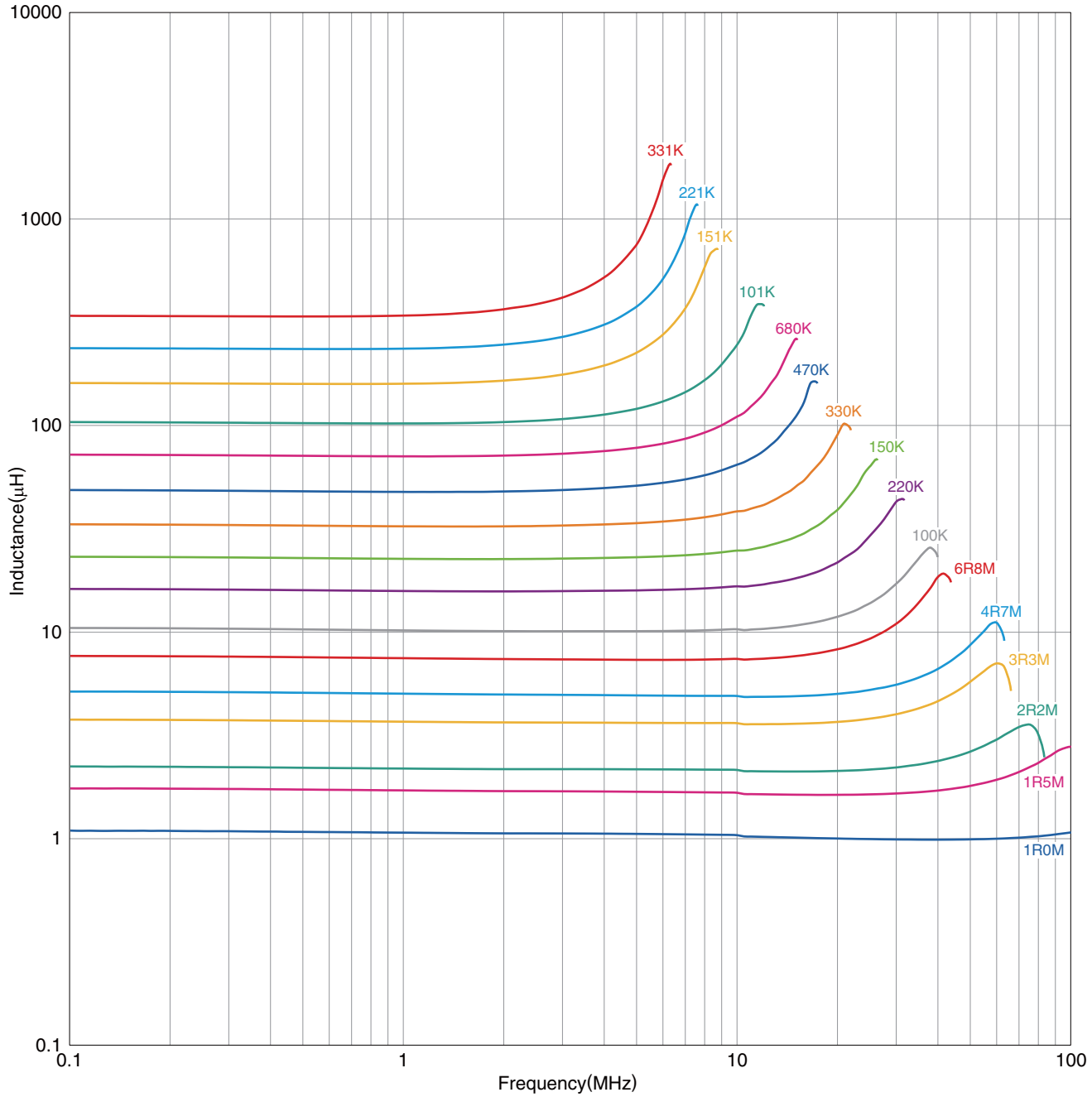

○ Measurement equipment

Product No.	Manufacturer
4294A	Agilent Technologies

＊ Equivalent measurement equipment may be used.

⚠ Please be sure to request delivery specifications that provide further details on the features and specifications of the products for proper and safe use.
Please note that the contents may change without any prior notice due to reasons such as upgrading.

NLCV32-PF Type

■ELECTRICAL CHARACTERISTICS

□INDUCTANCE VS. DC BIAS CHARACTERISTICS GRAPH

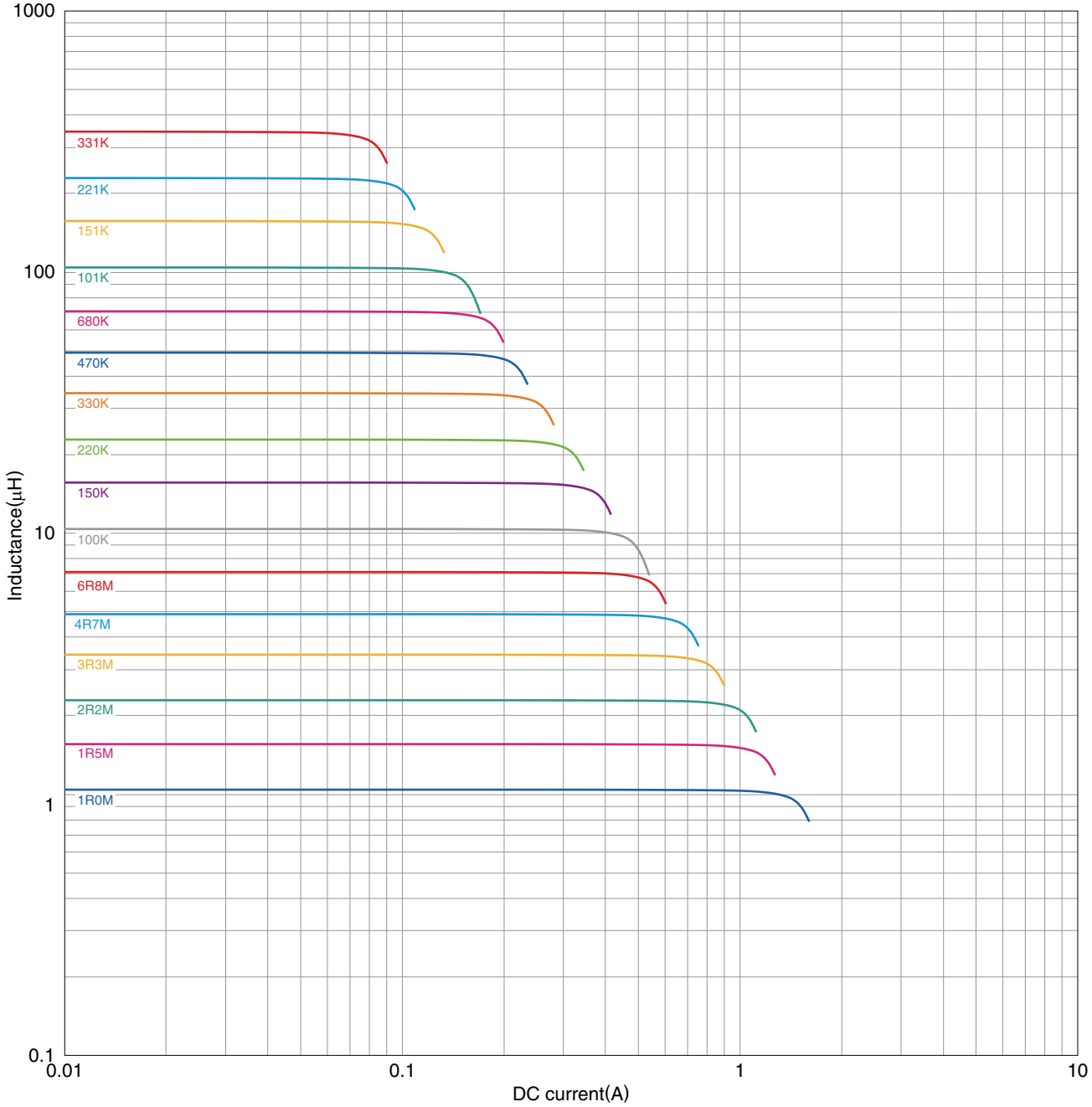

○ Measurement equipment

Product No.	Manufacturer
4285A+42841A+42842C	Agilent Technologies

＊ Equivalent measurement equipment may be used.

⚠ Please be sure to request delivery specifications that provide further details on the features and specifications of the products for proper and safe use.
Please note that the contents may change without any prior notice due to reasons such as upgrading.

NLCV32-PF Type

■ELECTRICAL CHARACTERISTICS

□IMPEDANCE FREQUENCY CHARACTERISTICS GRAPH

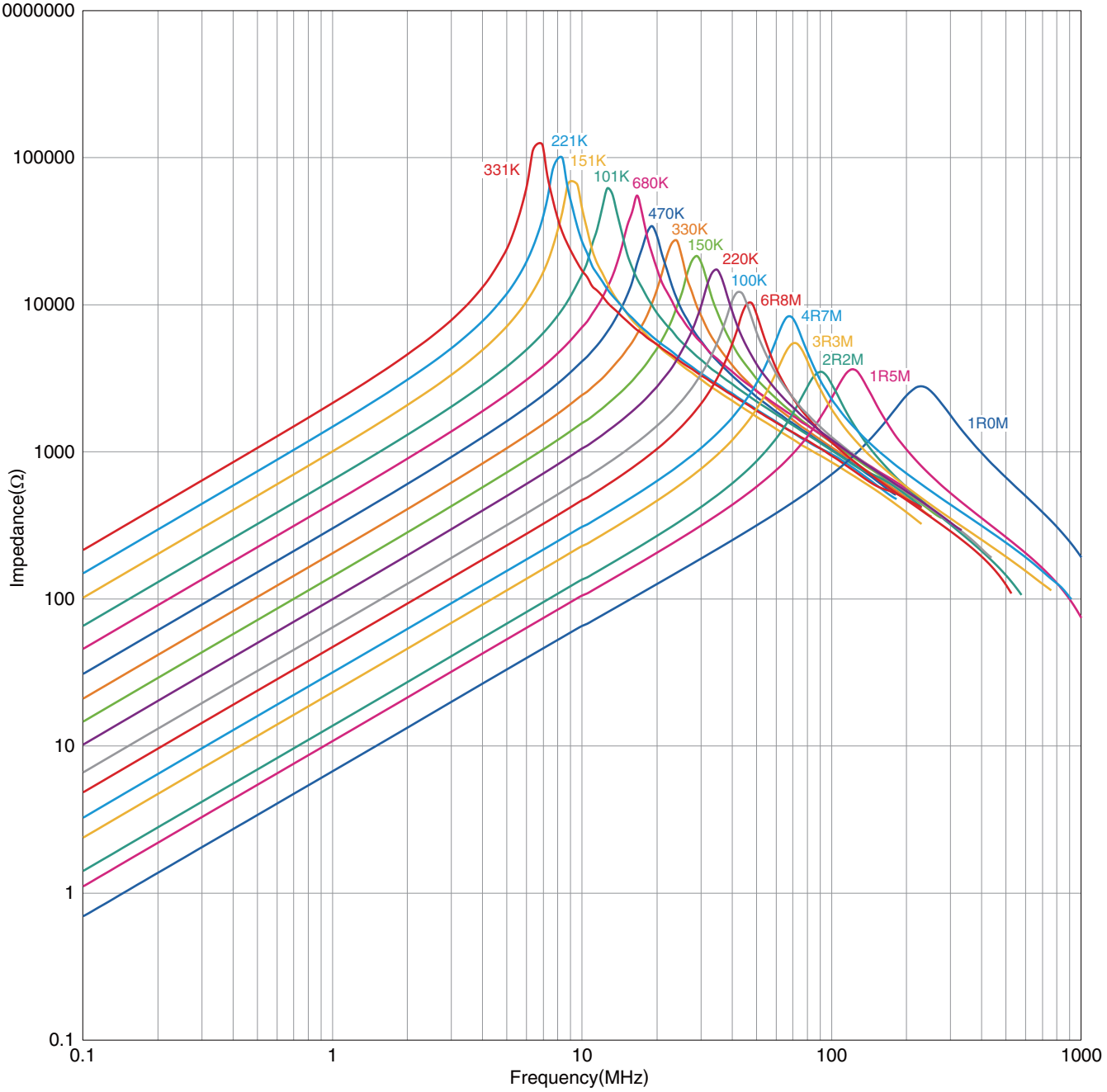

○ Measurement equipment

Product No.	Manufacturer
4294A	Agilent Technologies

＊ Equivalent measurement equipment may be used.

⚠ Please be sure to request delivery specifications that provide further details on the features and specifications of the products for proper and safe use.
Please note that the contents may change without any prior notice due to reasons such as upgrading.

NLCV32-PF Type

■PACKAGING STYLE

□REEL DIMENSIONS

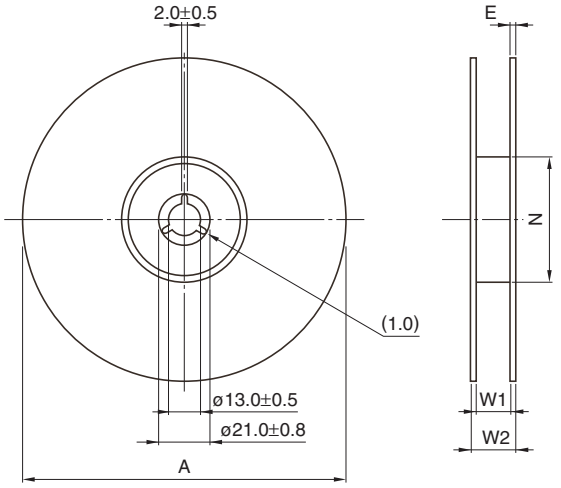

Dimensions in mm

Type	A	W1	W2	N	E
NLCV32-PF	ø180	9	13	ø60	0.5

* These values are typical values.

□TAPE DIMENSIONS

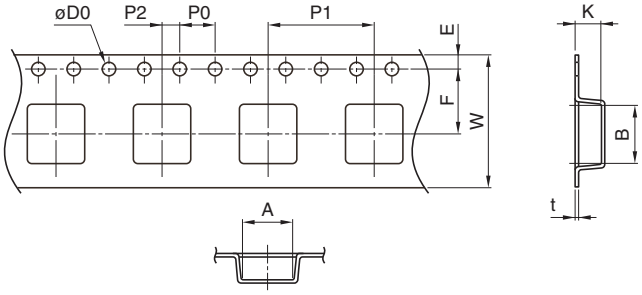

Dimensions in mm

Type	A	B	øD0	E	F	P0	P1	P2	W	K	t
NLCV32-PF	2.8	3.5	1.5+0.1/-0	1.75±0.1	3.50±0.05	4.00±0.10	4.00±0.10	2.00±0.05	8.00±0.30	2.3	0.4

⚠ Please be sure to request delivery specifications that provide further details on the features and specifications of the products for proper and safe use.
Please note that the contents may change without any prior notice due to reasons such as upgrading.