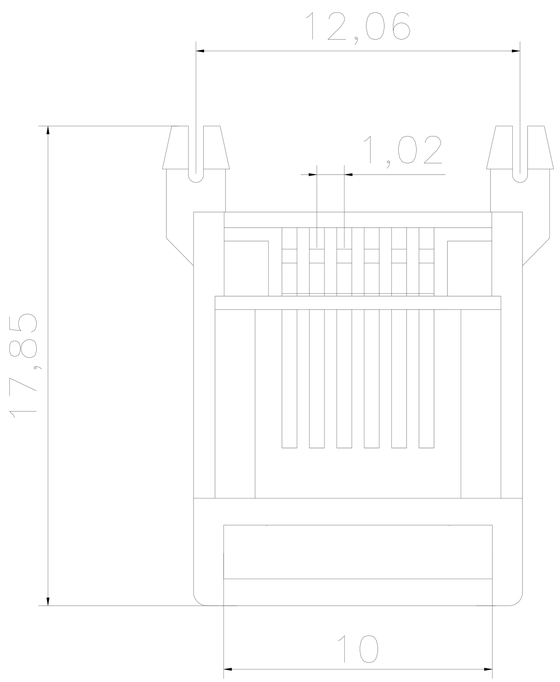

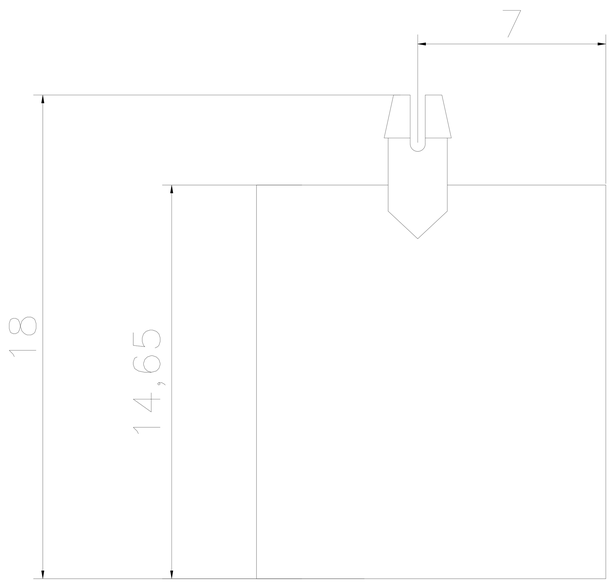

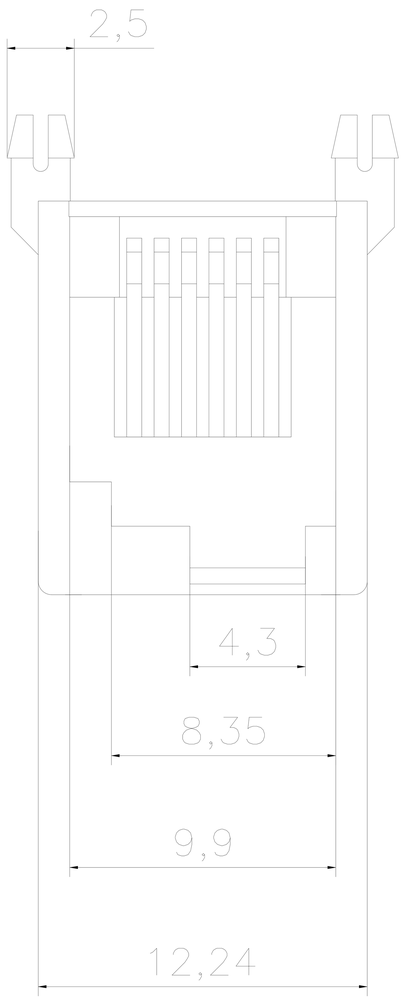

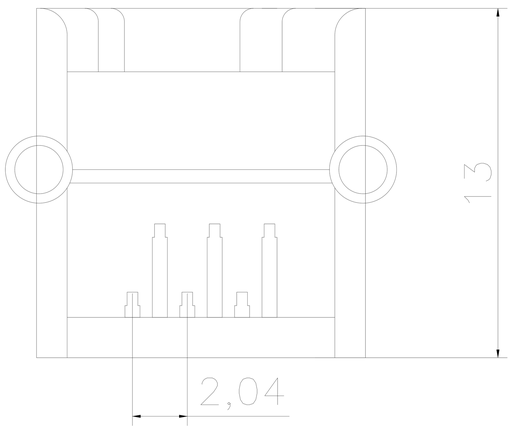

产品公差 0.1

??	??	?????	? ?	? ?	PCB右	? ? ? ? ? ? ? ?
? ?		????				? ? ? ?
? ?		? ?				TITLE 623M
? ?		? ?				
????		? ?				

?????
? ?
? ?
?????
? ?
? ?

X-ON Electronics

Largest Supplier of Electrical and Electronic Components

Click to view similar products for Modular Connectors / Ethernet Connectors ***category:***

Click to view products by Adafruit ***manufacturer:***

Other Similar products are found below :

8949-H88/06BLKA/SN 74441-0010/BKN MP1010RX-1000 MP44RX-1000 PHJ-4P4C-1-V-4 PHP-6P6C-5 GAX-3-66 GAX-8-62 GDCX-PA-66-50 GDCX-PN-64 GDCX-PN-66 GDCX-PN-66-50 GDLX-A-66 GDLX-N-66 GDLX-S-66 GDLX-S-88K GDLX-SMT-S-88 GDTX-S-88-50 GDX-PA-1010 GLX-N-1010M-BLK GLX-S-88M-BLK GMX-N-1010 GMX-S-1010 GMX-S-66 GMX-SMT4-N-88 GPX-2-64 GSGX-N-2-88 GSGX-N-4-88 GSX-NS2-88-3.05 GSX-NS2-88-3.05-50 GSX-NS-88-3.05-50 PT-108A-8C-UL PT-J951-8C PTS-J531-8CS-50UL 1-1775629-2 A-2014-0-4 GWLX-S-88-GR GWLX-S9-88-YG DC-1021-8-WH-6 1300530003 1324640-4 RJ11FTVC2G RJ11FTVC2N RJFTVX2SA1G 132764-001 1413235 MP88X-1000 MPS88RX-5000 E5288-S000K3-L E5908-15A242-L