Part Numbering System

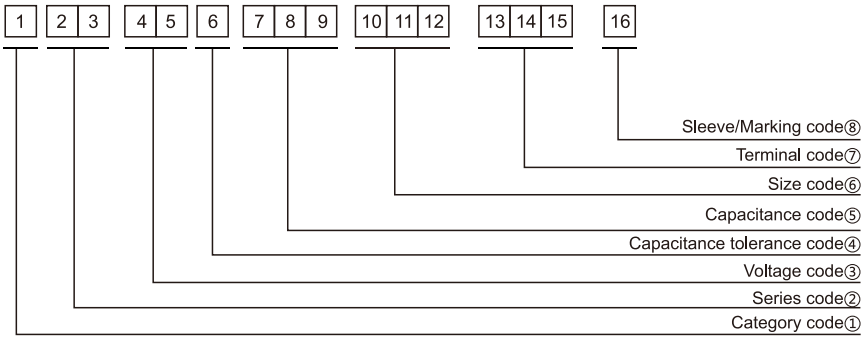

① Category code

Type	Code
	1
Electrolytic Capacitor	E
Conductive Polymer	S

② Series code

Series name	Code	
	2	3
WH	W	H
CD11GE	G	E
CD11GES	G	X
CD11GAS	G	W
CD11GHS	G	S
NR	N	R
PZ	P	Z

③ Voltage code

WV (V_{dc})	Code	
	4	5
2.5	0	E
3	0	D
4	0	G
6.3	0	J
6.8	0	C
7	0	Q
7.5	0	A
10	1	A
12	1	T
16	1	C
25	1	E
35	1	V
40	1	G
50	1	H
63	1	J
80	1	B
100	1	K
120	2	B
160	2	C
180	2	L
200	2	D
220	2	N
250	2	E
315	2	F
350	2	V
380	2	P
400	2	G
420	2	T
450	2	W
500	2	H
550	2	J
600	2	K

④ Capacitance tolerance code

Tol. (%)	Code
	6
-10~+10	K
-20~+20	M
-10~+30	Q
-10~+20	V
0~+20	A
-5~+20	C
-10~-20	B
-5~+5	D
0~+10	E
-5~-20	F
-15~+5	N

⑤ Capacitance code

Cap (μF)	Code		
	7	8	9
0.10	R	1	0
0.22	R	2	2
0.33	R	3	3
0.47	R	4	7
0.68	R	6	8
1	0	1	0
2.2	2	R	2
3.3	3	R	3
4.7	4	R	7
6.8	6	R	8
10	1	0	0
22	2	2	0
33	3	3	0
47	4	7	0
68	6	8	0
100	1	0	1
220	2	2	1
330	3	3	1
470	4	7	1
680	6	8	1
1000	1	0	2
2200	2	2	2
3300	3	3	2
4700	4	7	2
6800	6	8	2
10000	1	0	3
22000	2	2	3
33000	3	3	3
68000	6	8	3

⑥ Size code

ΦD (mm)	Code
	10
4	C
5	D
6.3	E
8	F
10	G
11	H
12	J
12.5	W
13	K
14	X
16	L
18	M
19	Z
20	N
22	O
25	P
30	Q
35	R
40	Y
51.6	S
64.3	T
76.9	U
91	V
100	A

L (mm)	Code	
	11	12
5	0	5
7	0	7
11	1	1
12	1	2
16	1	6
20	2	0
25	2	5
30	3	0
35	3	5
40	4	0
46	4	6
50	5	0
60	6	0
80	8	0
100	A	0
115	B	5
120	C	0
130	D	0
140	E	0
160	G	0
200	K	0
220	M	0
236	N	6
250	P	0

⑦ Terminal code

Specification	Code	Size	
	13	14	15
Bulk packing	O	-	-
Taping (SMD Type)	D	0	0
Φ4~8 Taping F=5.0mm	P	5	0
Φ10~12.5 Taping F=5.0mm	B	5	0
Lead Cut L=3.5mm	C	3	5
Lead Cut L=11.0mm	C	B	0
Lead Forming & Cut L=4.5mm	F	-	-
Kink & Cut L=4.5mm	J	-	-
Snap-in type Terminal 4.0mm in length	K	-	-
Three Terminals	T	-	-
Ring clip mounting standard design	A	0	0
Ring clip mounting special design	S	-	-

⑧ Sleeve/Marking code

Sleeve/Marking	Code
	16
PVC	C
PET	T
Dark blue	B
Bright red	R
Sky-blue	S
Light blue	T
Pink	Z
Black	H
Purple-blue	V
Red	O

Lead Forming

Taping Specifications

Fig.1 code: X

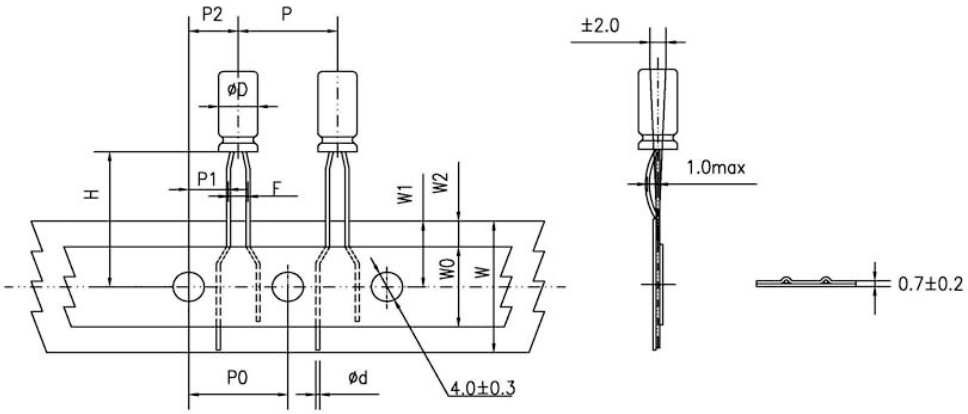

Fig.2 code: B

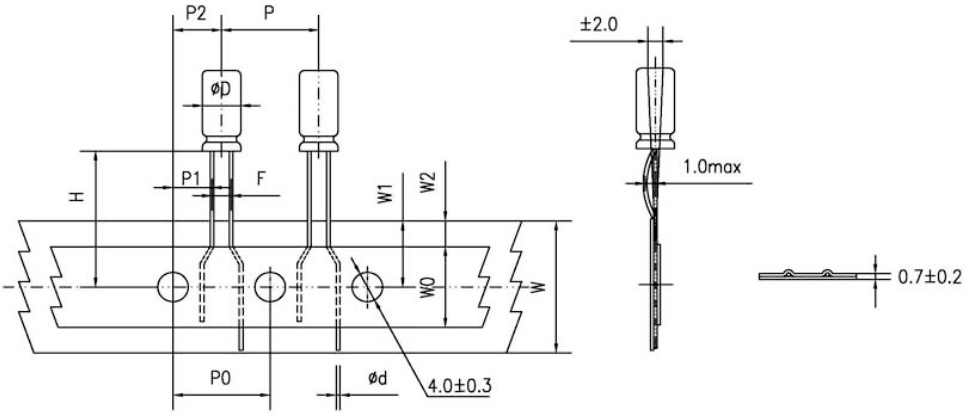

Fig.3 code: B

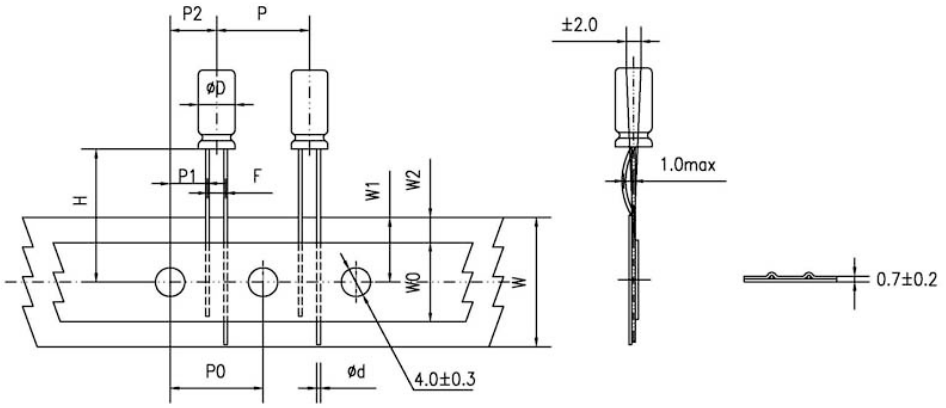

Fig.4 code: P

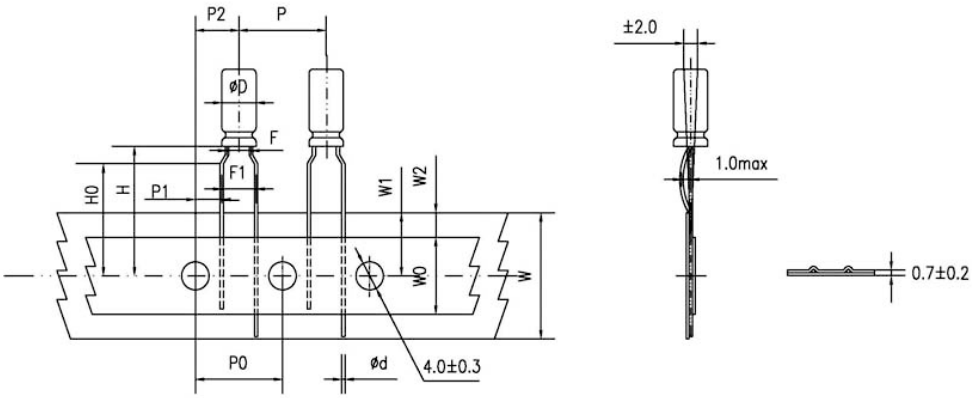

Lead Forming

Specification Fig.1 & Fig.2 & Fig.3

Items	Symbol	Case size																Tolerance
		4*5 4*7		5*5 5*7		5*11		6.3*5	6.3*7 6.3*9	6.3*11 6.3*12	8*5/7 8*9/11 8*11.5 8*12	8*16 8*20	10*9/12 10*12.5 10*13/16 10*20/25	
Pin Code		X	B	X	B	X	B	B	B	B	B	B	B	
Lead wire diameter	Φd	0.45		0.45		0.5		0.45	0.5	0.5	0.45/0.5	0.6	0.6	±0.05
Pitch of body	P	12.7		12.7		12.7		12.7	12.7	12.7	12.7	12.7	12.7	±1.0
Feed hole pitch	P0	12.7		12.7		12.7		12.7	12.7	12.7	12.7	12.7	12.7	±0.2
Distance from hole center to lead	P1	5.1	5.6	5.1	5.35	5.1	5.35	5.1	5.1	5.1	4.6	4.6	3.85	±0.7
Distance from feed hole center to body center	P2	6.35		6.35		6.35		6.35	6.35	6.35	6.35	6.35	6.35	±1.0
Lead-to-lead distance	F	2.5	1.5	2.5	2.0	2.5	2.0	2.5	2.5	2.5	3.5	3.5	5.0	±0.5
Height of body from tape center	H	18.5		18.5		18.5		18.5	18.5	18.5	18.5	18.5	18.5	±0.75
Base tape width	W	18.0		18.0		18.0		18.0	18.0	18.0	18.0	18.0	18.0	±0.5
Adhesive tape width	W0	6.0		6.0		6.0		6.0	6.0	8.0	8.0	8.0	11.0	min
Hole position	W1	9.0		9.0		9.0		9.0	9.0	9.0	9.0	9.0	9.0	+0.75 -0.5
Hole down tape position	W2	3.0		3.0		3.0		3.0	3.0	3.0	3.0	3.0	3.0	max

Specification Fig.4

Items	Symbol	Case size									Tolerance
		4*5 4*7	5*5	5*7	5*11	6.3*5	6.3*7 6.3*9	6.3*11 6.3*12	8*5/7 8*9/11 8*11.5/12	8*16 8*20	
Pin Code		P	P	P	P	P	P	P	P	P	
Lead wire diameter	Φd	0.45	0.45	0.45	0.5	0.45	0.5	0.5	0.45/0.5	0.6	±0.05
Pitch of body	P	12.7	12.7	12.7	12.7	12.7	12.7	12.7	12.7	12.7	±1.0
Feed hole pitch	P0	12.7	12.7	12.7	12.7	12.7	12.7	12.7	12.7	12.7	±0.2
Distance from hole center to lead	P1	3.85	3.85	3.85	3.85	3.85	3.85	3.85	3.85	3.85	±0.7
Distance from feed hole center to body center	P2	6.35	6.35	6.35	6.35	6.35	6.35	6.35	6.35	6.35	±1.0
Lead-to-lead distance	F	1.5	2.0	2.0	2.0	2.5	2.5	2.5	3.5	3.5	±0.5
Lead to lead distance	F1	5.0	5.0	5.0	5.0	5.0	5.0	5.0	5.0	5.0	+0.8 -0.2
Height of body from tape center	H	18.5	18.5	18.5	18.5	18.5	18.5	18.5	18.5	18.5	±0.75
Lead wire clinch height	H0	16.0	16.0	16.0	16.0	16.0	16.0	16.0	16.0	16.0	±0.5
Base tape width	W	18.0	18.0	18.0	18.0	18.0	18.0	18.0	18.0	18.0	±0.5
Adhesive tape width	W0	6.0	6.0	6.0	6.0	6.0	6.0	8.0	8.0	8.0	min
Hole position	W1	9.0	9.0	9.0	9.0	9.0	9.0	9.0	9.0	9.0	+0.75 -0.5
Hole down tape position	W2	3.0	3.0	3.0	3.0	3.0	3.0	3.0	3.0	3.0	max

Lead Forming

Lead Forming & Cut

Code:C
RANGE: Φ4~Φ18

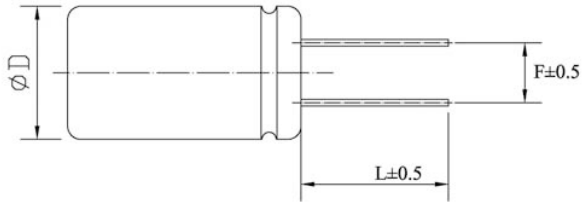

Code:F
RANGE: Φ4~Φ8

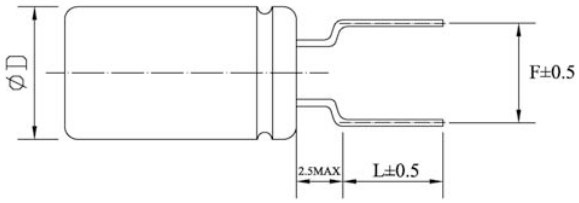

ΦD	F	L	ΦD	F	L
4	1.5	3.0~12.0	4	5.0	3.5, 4.5, 5.0, 7.0
5	2.0	3.0~12.0	5	5.0	3.5, 4.5, 5.0, 7.0
6.3	2.5	3.0~12.0	6.3	5.0	3.5, 4.5, 5.0, 7.0
8	3.5	3.0~12.0	8	5.0	3.5, 4.5, 5.0, 7.0
10	5.0	3.0~12.0	-	-	-
12.5	5.0	3.0~12.0	-	-	-
16	7.5	3.0~12.0	-	-	-
18	7.5	3.0~12.0	-	-	-

Code:J
RANGE: Φ10~Φ18

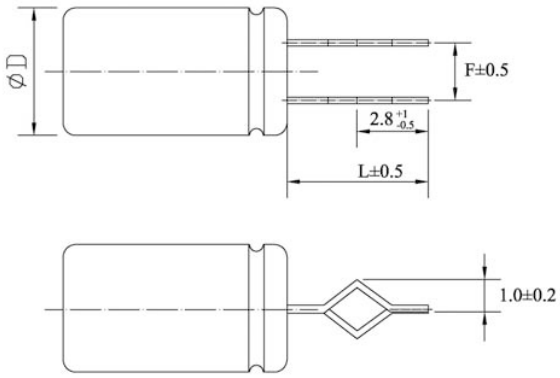

ΦD	F	L
10	5.0	4.0, 4.5, 5.0
12.5	5.0	4.0, 4.5, 5.0
16	7.5	4.0, 4.5, 5.0
18	7.5	4.0, 4.5, 5.0

CD11GD series

- Endurance: +105 °C 6,000 hours
- Miniaturized and high stability
- Suitable for output circuit and input circuit of LED driving power.
- **RoHS Compliant**

SPECIFICATIONS

Items	Characteristics									
Category Temperature Range	-40~+105°C(160~500 Vdc)									
Rated Voltage Range	160~500 Vdc									
Capacitance Tolerance	±20%(M)									(at 20°C,120Hz)
Leakage Current	160~400 Vdc	450~500 Vdc	Where, I: Max.leakage current (μA),C:Nominal capacitance (μF), V: Rated voltage (V)							
	I≤0.02CV+10μA	I≤0.03CV+10μA								(at 20°C after 2 minutes)
Dissipation Factor (tanδ)	Rated Voltage(Vdc)	160	200	250	350	400	450	500		
	tanδ (max.)	0.15	0.15	0.15	0.20	0.20	0.20	0.24		(at 20°C,120Hz)
Low Temperature Characteristics (Max. Impedance Ratio)	Rated Voltage(Vdc)	160	200	250	350	400	450	500		
	Z(-25°C)/Z(+20°C)	3	3	3	5	5	6	6		
	Z(-40°C)/Z(+20°C)	6	6	6	6	6	9	15		(at 120Hz)
Endurance	The specifications listed below shall be met when the capacitors are restored to 20 °C after DC voltage plus rated ripple current is applied for 6,000 hours at 105°C,the peak voltage shall not exceed the rated voltage.									
	Capacitance Change	≤±20% of the initial value								
	D.F. (tanδ)	≤200% of the initial specified value								
	Leakage Current	≤The initial specified value								
Shelf Life	The following specifications shall be satisfied when the capacitors are restored to 20°C after leaving them under no load at 105°C for 1,000 hours.									
	Capacitance Change	≤±20% of the initial value								
	D.F. (tanδ)	≤200% of the initial specified value								
	Leakage Current	≤200% of the initial specified value								

DIMENSIONS[mm]

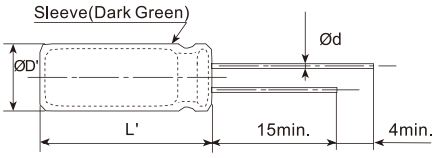

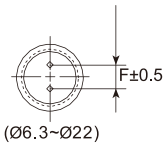

ØD	6.3	8		10	12.5	16	18	22
Ød	0.5	0.5	0.6	0.6	0.6	0.8	0.8	0.8
F	2.5	3.5		5.0	5.0	7.5	7.5	10
ØD'	ØD+0.5max.							
L'	L+2max.							

PART NUMBERING SYSTEM

E GD 2G M 3R3 F16 O- - T

- T — Sleeve Code: "C" for PVC, "T" for PET
- O- - — Terminal code
- F16 — Size code
- 3R3 — Capacitance code
- M — Capacitance tolerance code
- 2G — Voltage code
- GD — Series code
- E — Category code

RATED RIPPLE CURRENT MULTIPLIERS

Frequency correction factor for ripple current

Freq.(Hz) / Rated voltage(Vdc)	120	1k	10k	100k
160~500	0.50	0.80	0.90	1.00

CD11GD series

STANDARD RATINGS

WV (Vdc)	Cap (μF)	Size ΦDxL(mm)	tanδ	Rated ripple current (mArms/105°C,100kHz)
160(2C)	1	6.3*7	0.15	34
		6.3*9	0.15	36
		6.3*12	0.15	40
	1.5	6.3*7	0.15	38
		6.3*12	0.15	50
	1.8	6.3*7	0.15	49
		6.3*9	0.15	50
		6.3*12	0.15	56
	2.2	6.3*7	0.15	53
		6.3*9	0.15	56
		6.3*12	0.15	60
	2.8	6.3*7	0.15	57
		6.3*9	0.15	60
		6.3*12	0.15	65
	3.3	6.3*7	0.15	61
		6.3*9	0.15	65
		6.3*12	0.15	68
	3.9	6.3*7	0.15	65
		6.3*9	0.15	68
	4.7	6.3*7	0.15	66
		6.3*9	0.15	70
		6.3*12	0.15	72
	5.6	6.3*9	0.15	72
		8*9	0.15	74
		8*12	0.15	76
	6.8	6.3*12	0.15	84
		8*9	0.15	86
		8*12	0.15	96
	8.2	6.3*12	0.15	120
		8*9	0.15	135
	10	6.3*12	0.15	145
		8*9	0.15	165
		8*12	0.15	206
		8*16	0.15	216
	12	8*9	0.15	180
	15	8*12	0.15	213
		8*16	0.15	225
		10*9	0.15	200
	22	8*16	0.15	330
		8*20	0.15	360
		10*16	0.15	360
	33	10*12	0.15	400
		10*20	0.15	450
	47	10*16	0.15	435
		10*20	0.15	500
	56	10*20	0.15	530
	68	12.5*16	0.15	565
		12.5*20	0.15	600
	100	12.5*20	0.15	700
		12.5*25	0.15	722
		16*20	0.15	722
	150	16*20	0.15	740
		16*25	0.15	798
	220	16*25	0.15	900
	330	18*30	0.15	1100

WV (Vdc)	Cap (μF)	Size ΦDxL(mm)	tanδ	Rated ripple current (mArms/105°C,100kHz)
200(2D)	1	6.3*7	0.15	35
		6.3*9	0.15	38
		6.3*12	0.15	42
	1.2	6.3*7	0.15	38
		6.3*9	0.15	42
	1.5	6.3*7	0.15	49
		6.3*9	0.15	50
		6.3*12	0.15	54
	1.8	6.3*7	0.15	50
		6.3*9	0.15	54
		6.3*12	0.15	60
	2.2	6.3*7	0.15	55
		6.3*9	0.15	60
		6.3*12	0.15	68
	2.8	6.3*7	0.15	61
		6.3*9	0.15	68
		6.3*12	0.15	71
	3.3	6.3*7	0.15	65
		6.3*9	0.15	72
		6.3*12	0.15	78
	4.7	6.3*9	0.15	76
		6.3*12	0.15	85
		8*9	0.15	88
	5.6	6.3*12	0.15	90
		8*9	0.15	92
		8*12	0.15	98
	6.8	6.3*12	0.15	94
		8*9	0.15	98
		8*16	0.15	103
	8.2	8*9	0.15	145
	10	8*12	0.15	180
		8*16	0.15	216
		10*9	0.15	190
	15	8*12	0.15	200
		8*16	0.15	225
		8*20	0.15	250
	22	8*20	0.15	380
		10*12	0.15	320
		10*16	0.15	380
	33	10*20	0.15	450
		12.5*13	0.15	430
		12.5*16	0.15	450
	47	10*20	0.15	520
		12.5*16	0.15	520
		12.5*20	0.15	580
	68	12.5*20	0.15	600
		12.5*25	0.15	665
	100	12.5*25	0.15	700
		16*25	0.15	760
	150	16*25	0.15	800
		16*30	0.15	895

CD11GD series

STANDARD RATINGS

WV (Vdc)	Cap (μF)	Size ΦDxL(mm)	tanδ	Rated ripple current (mArms/105°C,100kHz)
250(2E)	1	6.3*7	0.15	36
		6.3*9	0.15	40
		6.3*12	0.15	46
	1.2	6.3*7	0.15	41
		6.3*9	0.15	46
	1.5	6.3*7	0.15	51
		6.3*9	0.15	54
		6.3*12	0.15	58
	1.8	6.3*7	0.15	54
		6.3*9	0.15	58
		6.3*12	0.15	62
	2.2	6.3*7	0.15	55
		6.3*9	0.15	62
		6.3*12	0.15	70
	2.8	6.3*7	0.15	63
		6.3*9	0.15	70
		6.3*12	0.15	78
	3.3	6.3*9	0.15	75
		6.3*12	0.15	80
	4.7	6.3*12	0.15	92
		8*9	0.15	92
		8*12	0.15	102
	5.6	8*9	0.15	95
		8*12	0.15	105
	6.8	8*9	0.15	105
		8*16	0.15	115
	8.2	8*10	0.15	108
		8*16	0.15	120
		10*9	0.15	110
	10	8*10	0.15	187
		8*16	0.15	216
		10*9	0.15	175
	15	8*16	0.15	225
		8*20	0.15	250
	22	8*16	0.15	350
		10*16	0.15	380
	33	12.5*16	0.15	450
		12.5*20	0.15	470
	47	12.5*16	0.15	520
		12.5*20	0.15	580
	68	12.5*25	0.15	660
		16*25	0.15	720
	100	16*20	0.15	730
		16*30	0.15	836
	150	16*35	0.15	978
		18*25	0.15	885
350(2V)	1	6.3*7	0.20	40
		6.3*9	0.20	45
		6.3*12	0.20	50
	1.2	6.3*7	0.20	55
		6.3*9	0.20	50
	1.5	6.3*9	0.20	55
		6.3*12	0.20	60
	1.8	6.3*9	0.20	60
		6.3*12	0.20	64
	2.2	6.3*9	0.20	66
		6.3*12	0.20	70
		8*9	0.20	72

WV (Vdc)	Cap (μF)	Size ΦDxL(mm)	tanδ	Rated ripple current (mArms/105°C,100kHz)
350(2V)	2.8	8*9	0.20	76
		8*12	0.20	80
	3.3	6.3*12	0.20	77
		8*9	0.20	78
		8*12	0.20	82
	4.7	8*9	0.20	90
		8*12	0.20	102
		10*9	0.20	104
	5.6	8*12	0.20	105
		8*16	0.20	110
		10*9	0.20	106
	6.8	8*12	0.20	112
		8*20	0.20	128
		10*9	0.20	120
	8.2	8*16	0.20	130
		8*20	0.20	144
	10	8*20	0.20	226
		10*12	0.20	205
	15	10*16	0.20	260
		10*20	0.20	285
	22	12.5*20	0.20	410
	33	12.5*20	0.20	425
		12.5*25	0.20	480
	47	16*20	0.20	600
	68	18*20	0.20	720
	100	18*25	0.20	850
		18*30	0.20	900
400(2G)	1	6.3*7	0.20	50
		6.3*9	0.20	55
		6.3*12	0.20	59
	1.2	6.3*9	0.20	59
		6.3*12	0.20	63
	1.5	6.3*9	0.20	65
		8*12	0.20	72
	1.8	8*7	0.20	68
		8*9	0.20	70
		8*12	0.20	75
	2.2	6.3*9	0.20	68
		6.3*12	0.20	72
		8*9	0.20	75
		8*12	0.20	78
	2.8	6.3*12	0.20	74
		8*9	0.20	78
		8*16	0.20	85
	3.3	8*7	0.20	78
		8*9	0.20	85
		8*12	0.20	91
		8*16	0.20	95
	4.7	8*9	0.20	90
		8*12	0.20	104
		8*16	0.20	110
		10*9	0.20	106
	5.6	8*12	0.20	114
		8*20	0.20	138
		10*16	0.20	138
	6.8	8*16	0.20	132
		8*20	0.20	148
		10*16	0.20	148

CD11GD series

STANDARD RATINGS

WV (Vdc)	Cap (μF)	Size ΦDxL(mm)	tanδ	Rated ripple current (mArms/105°C,100kHz)
400(2G)	8.2	10*16	0.20	218
		10*20	0.20	230
	10	10*16	0.20	226
		10*20	0.20	238
	15	10*20	0.20	255
		12.5*16	0.20	270
		12.5*20	0.20	300
	22	12.5*20	0.20	400
		12.5*25	0.20	420
		16*20	0.20	420
	33	16*25	0.20	550
		16*30	0.20	579
	47	16*25	0.20	590
		12.5*40	0.20	630
		16*30	0.20	637
	68	18*25	0.20	700
		18*30	0.20	760
	100	18*30	0.20	900
		18*40	0.20	1100
450(2W)	1	6.3*9	0.20	55
		8*12	0.20	60
	1.2	6.3*9	0.20	60
	1.5	8*9	0.20	65
		8*12	0.20	70
	1.8	8*9	0.20	68
		8*12	0.20	72
	2.2	8*9	0.20	72
		8*16	0.20	75
	2.8	8*9	0.20	75
		8*16	0.20	79
	3.3	8*12	0.20	80
		8*16	0.20	86
		10*9	0.20	80
	4.7	8*12	0.20	84
		8*20	0.20	99

WV (Vdc)	Cap (μF)	Size ΦDxL(mm)	tanδ	Rated ripple current (mArms/105°C,100kHz)
450(2W)	5.6	10*12	0.20	102
		10*16	0.20	115
	6.8	10*12	0.20	130
		10*20	0.20	158
	8.2	10*16	0.20	185
		10*20	0.20	209
	10	10*16	0.20	218
		10*20	0.20	225
		12.5*16	0.20	225
	15	12.5*20	0.20	332
	22	12.5*25	0.20	427
	33	10*45	0.20	510
		16*25	0.20	522
	47	12.5*45	0.20	660
		16*25	0.20	630
		16*35	0.20	700
	68	18*30	0.20	769
	100	18*35	0.20	890
		18*40	0.20	950
500(2H)	10	12.5*20	0.24	259
		12.5*25	0.24	272
	15	12.5*25	0.24	356
		16*20	0.24	356
	22	12.5*35	0.24	453
		16*25	0.24	453
	33	18*25	0.24	567
	47	18*30	0.24	713
	68	22*35	0.24	1000
	100	22*35	0.24	1400

Solering Recommendation

■ Flow Soldering(Radial Lead Type)

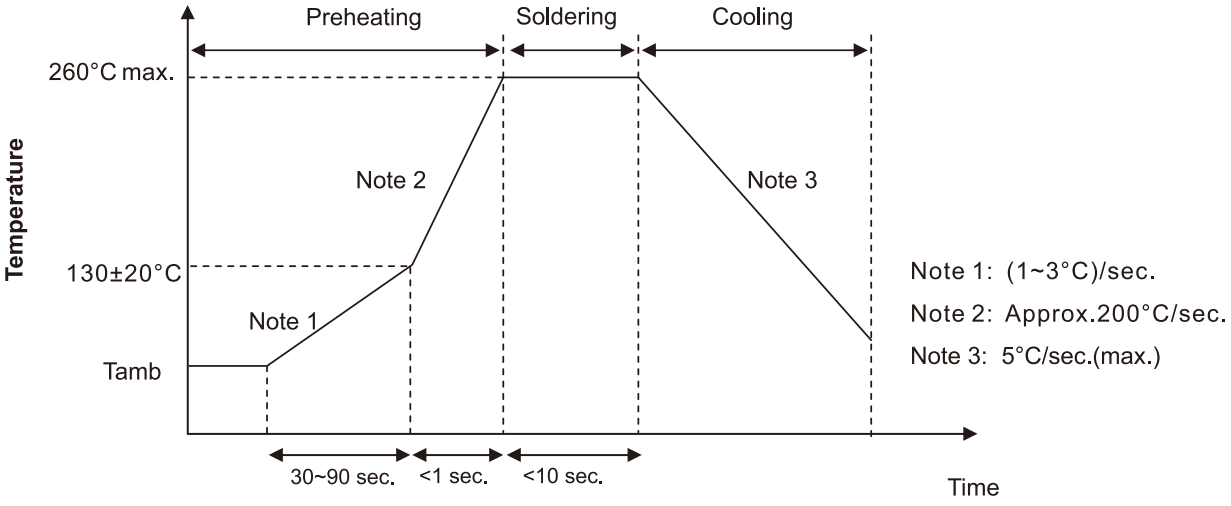

■ Reflow Soldering

- (For Polymer SMD Type)

Recommended Reflow Profile

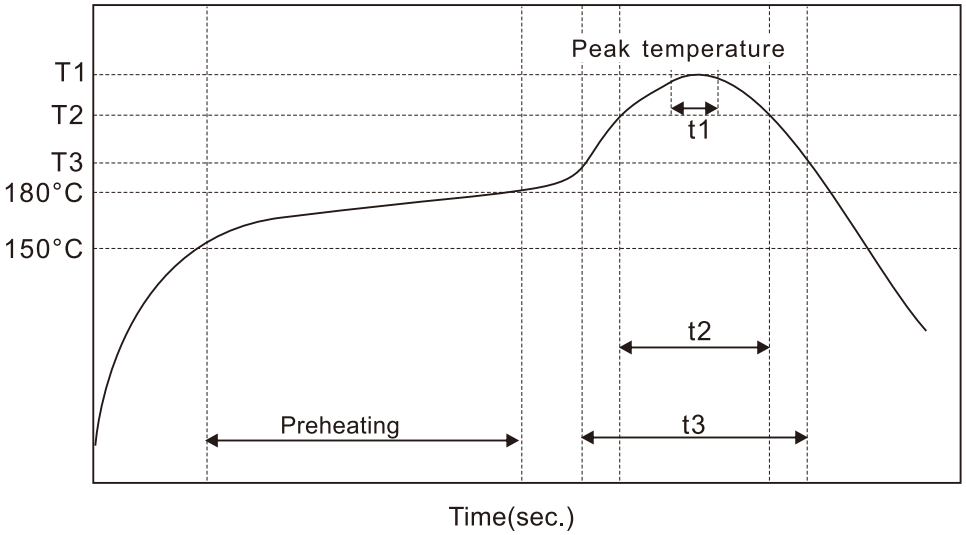

Item	Preheating	T1(°C)	T2(°C)	T3(°C)	t1(sec.)	t2(sec.)	t3(sec.)	Reflow cycle
Condition 1	150°C to 180°C Within 90sec.	≤260	230	200	≤10	≤40	≤60	1
Condition 2		≤250	230	200	≤10	≤40	≤60	2

• (For Liquid SMD Type)

Case size:Φ6.3~Φ10mm:

- Temperature at surface of capacitor shall not exceed T°C.
- The duration for over 200°C temperature and T_1°C at surface of capacitor shall not exceed t and t_1 seconds,respectively.
- Preheat shall be done at 100°C to 200°C and for Maximum 180 seconds.

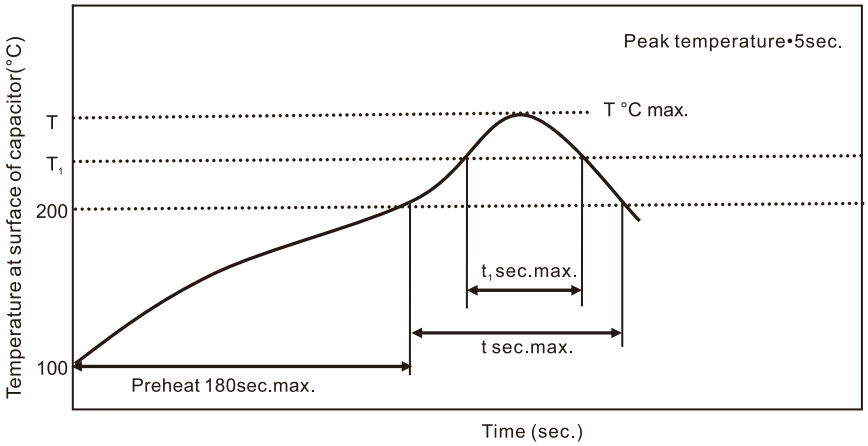

Case size (mm)	T(°C) ①	T_1(°C)	t(sec.) ②	t_1(sec.) ③	Reflow cycle
Φ6.3	250	230	90	40	1
Φ8	240	230	90	30	1
Φ10	235	230	60	30	1

① Peak temperature
② The duration over 200°C (max.)
③ The duration over T_1°C
■ Please contact us if capacitors are subject to the conditions other than the allowable range of reflow.

Case size:Φ12.5~Φ18mm:

- Temperature at surface of capacitor shall not exceed T°C.
- The duration for over 200°C temperature and T_1°C at surface of capacitor shall not exceed t and t_1 seconds,respectively.
- Preheat shall be done at 100°C to 180°C and for Maximum 150 seconds.

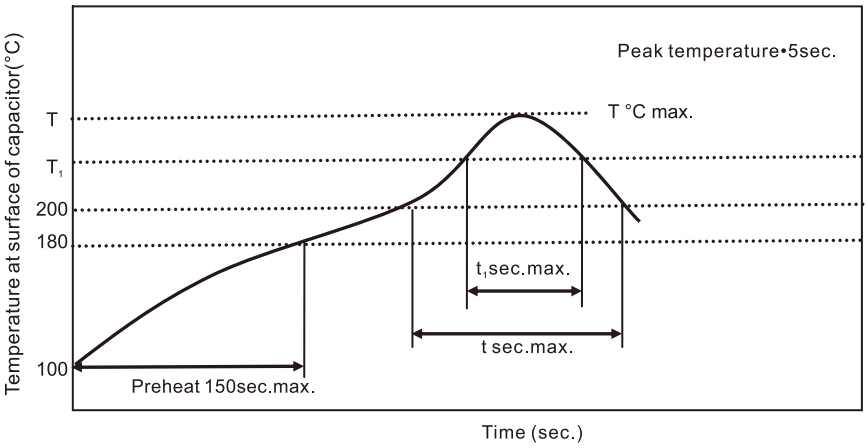

Case size (mm)	T(°C) ①	T_1(°C)	t(sec.) ②	t_1(sec.) ③	Reflow cycle
Φ12.5~Φ18	240	230	60	30	1

① Peak temperature
② The duration over 200°C (max.)
③ The duration over T_1°C
■ Please contact us if capacitors are subject to the conditions other than the allowable range of reflow.

X-ON Electronics

Largest Supplier of Electrical and Electronic Components

Click to view similar products for Aluminium Electrolytic Capacitors - Radial Leaded ***category:***

Click to view products by Aihua ***manufacturer:***

Other Similar products are found below :

NRELS102M35V16X16C.140LLF ESRG160ETC100MD07D 227RZS050M 335CKR250M 476CKH100MSA 477CKR100M 107CKR010M 107CKH063MSA RJH-25V222MI9# RJH-35V221MG5# B43827A1106M8 RJH-50V221MH6# EKYA500ELL470MF11D B41022A5686M6 ESRG250ELL101MH09D EKMA160EC3101MF07D RJB-10V471MG3# ESMG160ETD221MF11D EKZH160ETD152MJ20S RJH-35V122MJ6# EGXF630ELL621ML20S RBD-25V100KE3#N EKMA350ELL100ME07D ESMG160ETD101ME11D ELXY100ETD102MJ20S EGXF500ELL561ML15S EKMG350ETD471MJ16S 35YXA330MEFC10X12.5 RXW471M1ESA-0815 ELXZ630ELL221MJ25S ERR1HM1R0D11OT LPE681M30060FVA LPL471M22030FVA HFE221M25030FVA LKMD1401H221MF B41888G6108M000 EKMA160ETD470MF07D UHW1J102MHD6 EKMG500ETD221MJC5S LKMK2502W101MF LKMD1401H181MF LKMI2502G820MF LKMJ2001J122MF LKML2501C472MF LKMJ4002C681MF 450MXH330MEFCSN25X45 450MXK330MA2RFC22X50 63ZLH560MEFCG412.5X30 ELH2DM331O25KT ELH2DM471P30KT