PIN	SD Mode
#1	DAT2
#2	DAT3/CD
#3	CMD
#4	V_{DD}
#5	CLK
#6	V_{SS}
#7	DAT0
#8	DAT1

Pin Assignments

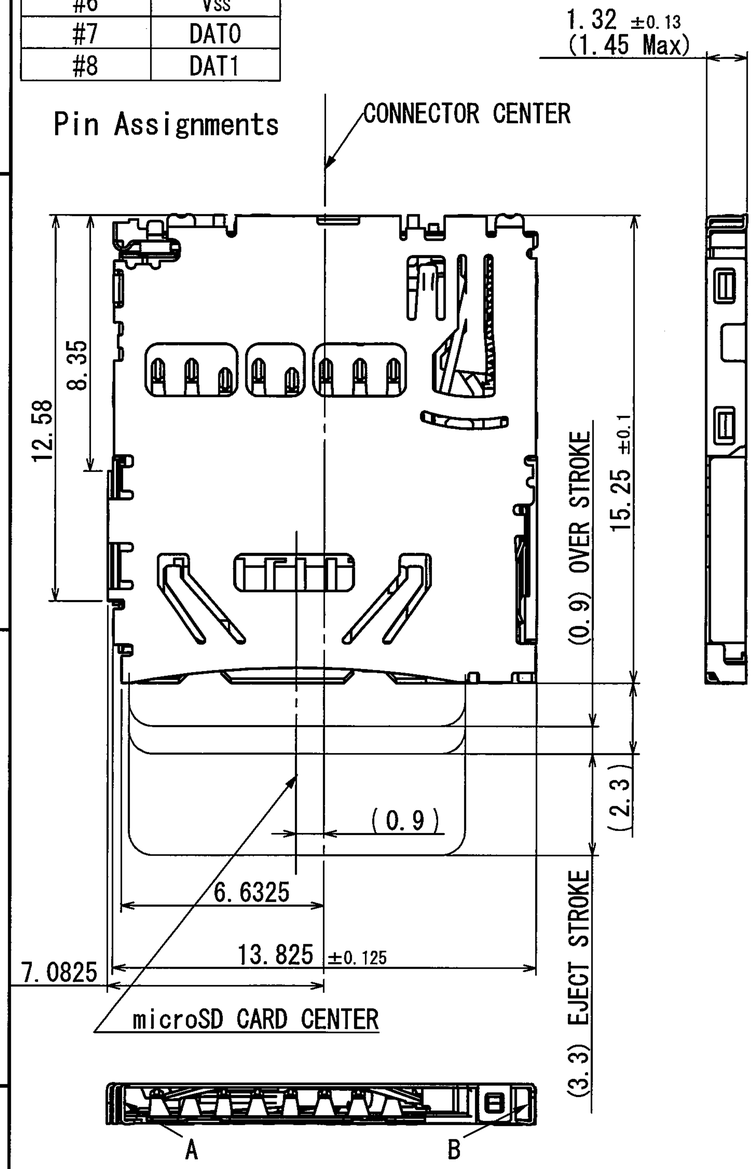

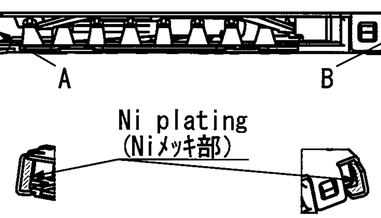

VIEW A VIEW B

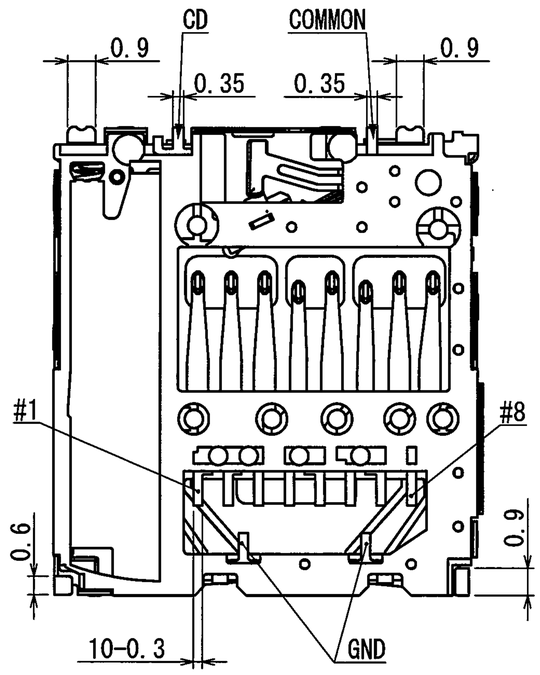

Circuit Diafram for Detect Switch

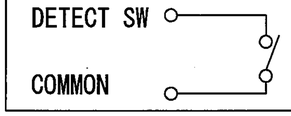

Insertiong CARD=ON
→Normal=OFF

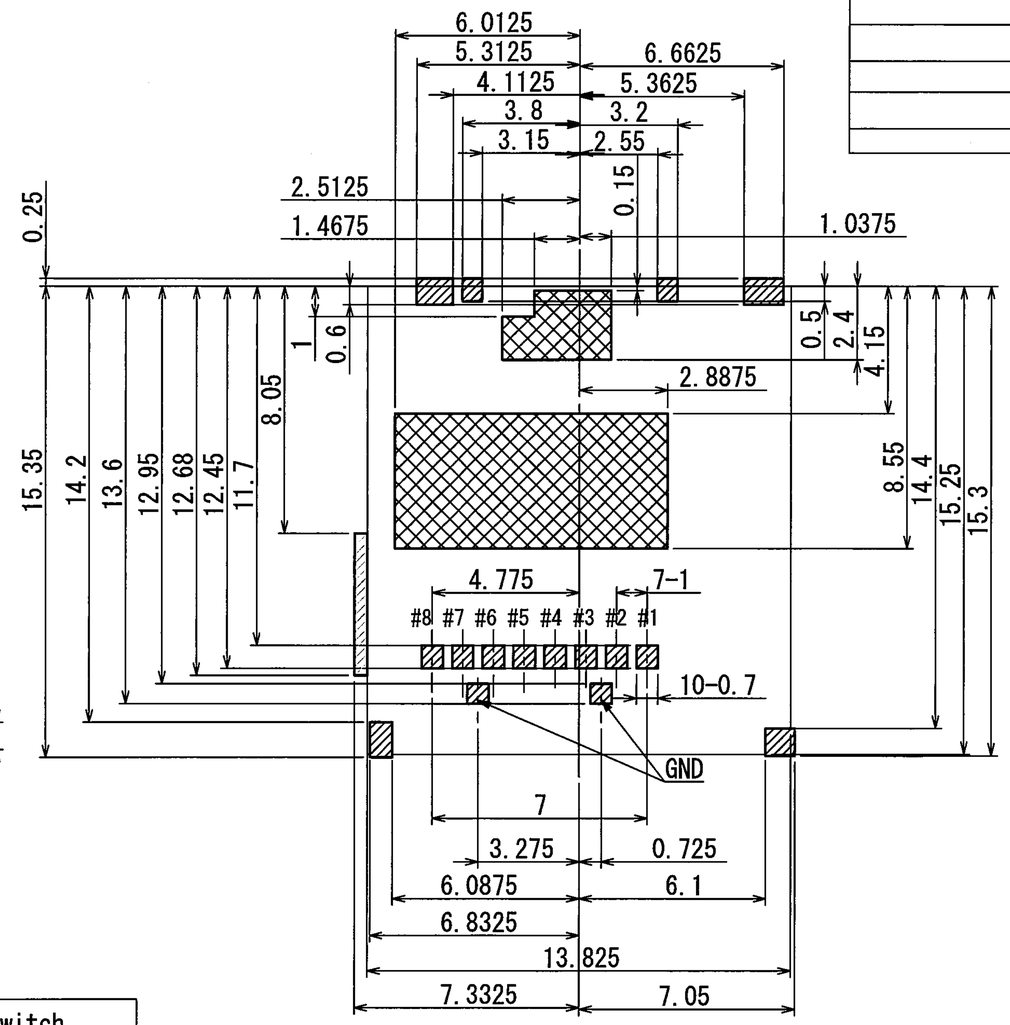

PATTERN AREA

NO PATTERN EXPOSED AREA

NO PATTERN AREA

RECOMMENDED P.C.BOARD LAYOUT
TOLERANCES UNLESS OTHERWISE SPEC. ±0.05

NOTE 1. This connector is standard mount type.
2. All terminal coplanarity : 0.1mm max. (INITIAL)

TOLERANCES UNLESS OTHERWISE SPEC	
BASIC DIMENSIONS	TOLERANCES
UP TO 10	±0.3
ABOVE 10 TO 100	±0.5
ABOVE 100	±0.8
ANGULAR DIMENSION	±5°

SYMB	DATE	APPD	CHKD	DSGD

背景
BACK GROUND
DSLJ14053

ALPS ELECTRIC CO., LTD.

DSGD. 06. Dec. 2014 Dai xuejuan	SCALE	NO. SCHA4B0419
CHKD. 06-Dec.-2014		TITLE PRODUCT DRAWING (1/2)
APPD. 06 Dec. 2014	UNIT mm	DOCUMENT NO. SCHA4B0419, AE12, 00

REEL CORE(1:5)

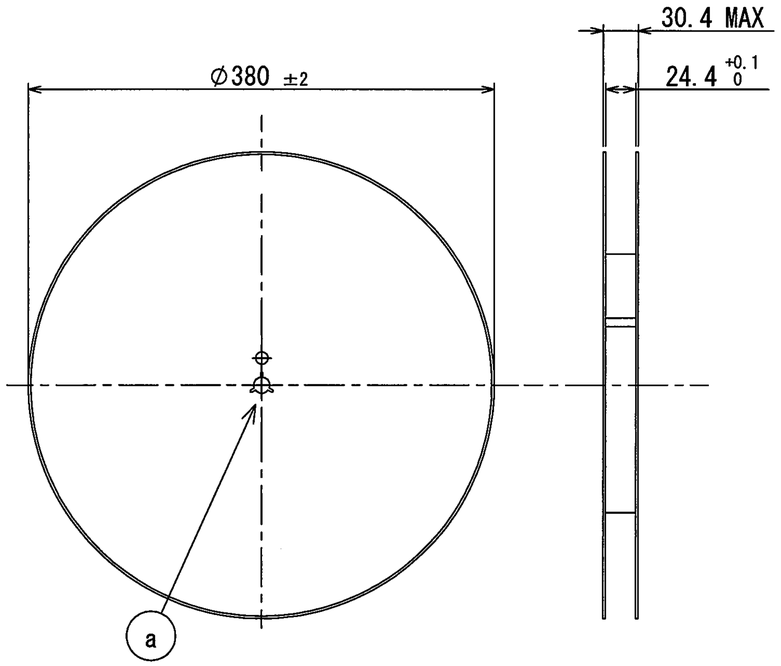

DETAIL (a) (1:1)

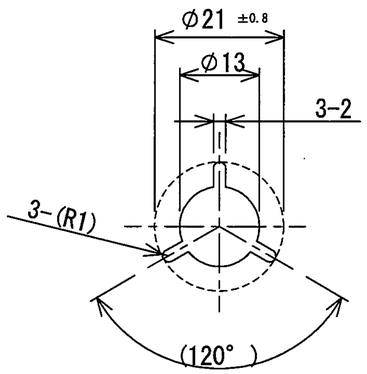

CARRIE TAPE(2:1)

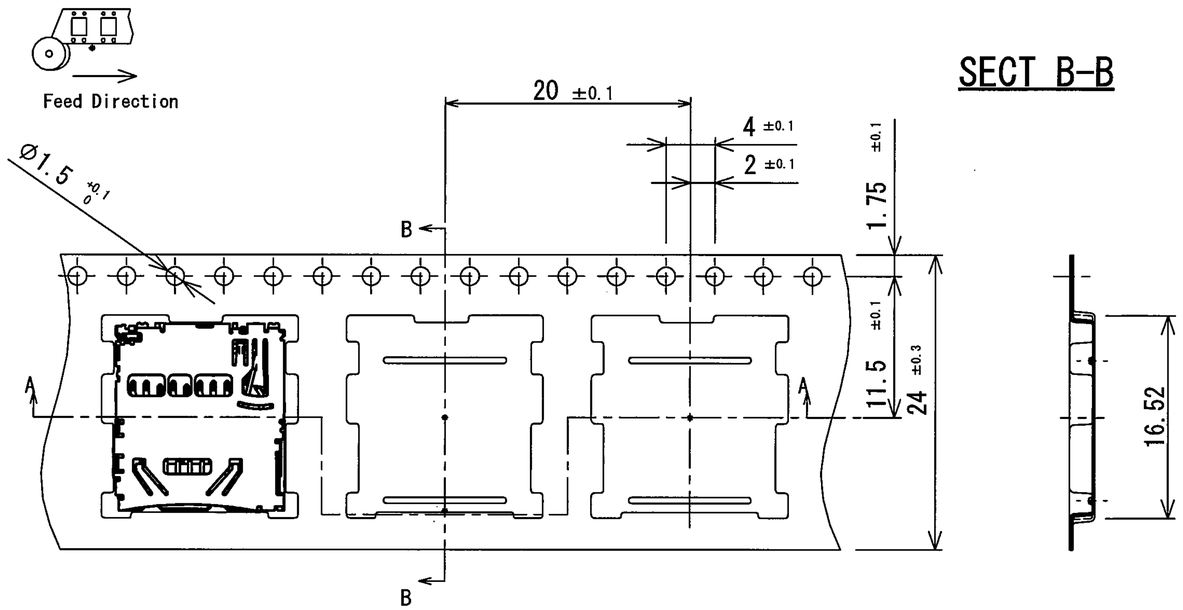

SECT B-B

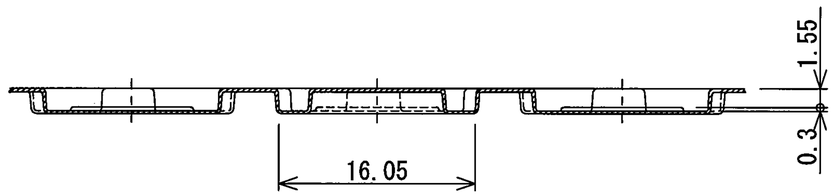

SECT A-A

2. 2000pcs/reel
1. SPECIFICATION OF TAPING:TAPE-S-029

NOTE

TOLERANCES UNLESS OTHERWISE SPEC	
BASIC DIMENSIONS	TOLERANCES
UP TO 10	±0.3
ABOVE 10 TO 100	±0.5
ABOVE 100	±0.8
ANGULAR DIMENSION	±5°

SYMB	DATE	APPD	CHKD	DSGD

ALPS ELECTRIC CO., LTD.

DSGD. 06. Dec. 2014 Dai xuejuan	SCALE	NO. SCHA4B0419	
CHKD. 06.Dec.2014		TITLE TAPING PRODUCT DRAWING (2/2)	
APPD. 06 Dec. 2014	UNIT mm	DOCUMENT NO. SCHA4B0419, AE22, 00	

X-ON Electronics

Largest Supplier of Electrical and Electronic Components

Click to view similar products for Memory Card Connectors ***category:***

Click to view products by ALPS ***manufacturer:***

Other Similar products are found below :

M21-033321-005 6407-249V-25273P 6407-249V-25343P 6426-201-21343 69.920.0553.0 FCN-568P068-G/07-4V 809180410000000 N7E50-7516PG-20-WF 21920-5 2041353-2 33CFAE-DN 502431-1011 EN2997S61212BN EN2997SE61212BN 617230001 95622-003LF 95079-00CALF 84648-056HLF 68-580163-21S 33DVIR-29S12R 125A-78C00 MI20A-50PD-SF-EJL(71) KP10S-SF-PEJ(812) 504536-0691 504580-0691 CCM03-3109 B LFT 2309923-1 61126-050CAHLF G85DT17001P1EU G85B21611142HHR GSD090144HR G85D1140022P1HR GMCB05801124EU 112K-TAA0-RA1 115S-ACA2 115S-ACA3 115S-BS00 115S-BT00 115V-AD00 MCSP-Q1-08-A-SG-T/R 503960-0695 101B-TAA0-R 101D-TAAA-R01 101D-TAAB-R01 104D-TCA0-R06 104B-TAA0-R 112C-TBAR-R02 114B-40B00-R02 112G-TA00-R 112J-TDAR-R01