SYMB	REVISIONS

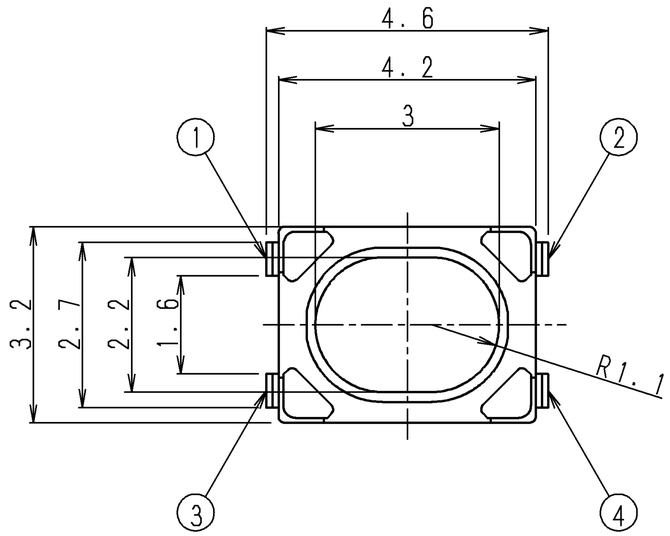

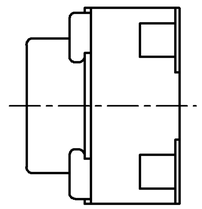

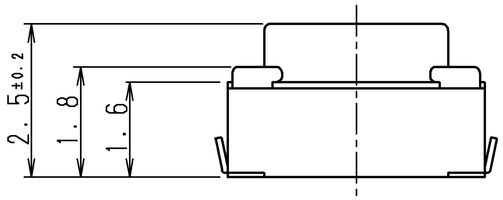

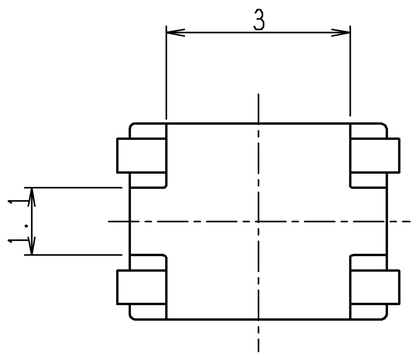

PRINTED CIRCUIT MOUTING HOLE DIMENSION
推奨ランド寸法(10:1)

(WHEN VIEWED FROM SWITCH MOUTING FACE)
(スイッチ取り付面より見る)

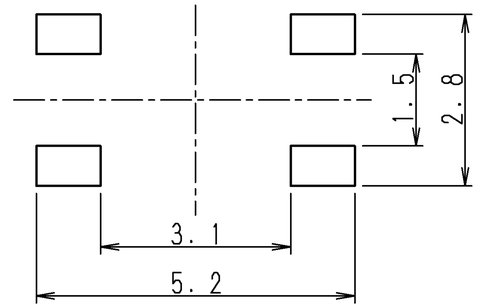

CIRCUIT DIAGRAM
回路図

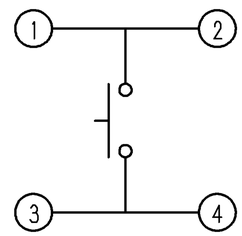

NOTE 1. TAPING SPECIFICATION TO BE ACCORDANCE WITH TRP-901.
注記　テーピング仕様書は，TRP-901に依る。

PART NO.	MATERIAL	SPEC/NAME	FINISH	REMARK

TOLERANCE UNLESS OTHERWISE SPEC.	
BASIC DIMENSIONS	TOLERANCES
UP TO 10	±0.3
ABOVE 10 TO 100	±0.5
ABOVE 100	±0.8
ANGULAR DIMENSIONS	±3°

NO.	SYMB	DATE	APPD	CHKD	DSGD

ALPS ELECTRIC CO., LTD.

DSGD. 2010.12.25 DG2 M. NAKAJIMA	SCALE 10:1	NO. SKRPANE010
CHKD. 2010.12.25 DG2 H. KOZUMA		TITLE PRODUCT DRAWING(製品図)
APPD. 2010.12.25 DG2 Y. KATO	UNIT mm	DOCUMENT NO. SKRPANE010.1100.31

APPROVED

(A3)

X-ON Electronics

Largest Supplier of Electrical and Electronic Components

Click to view similar products for Tactile Switches ***category:***

Click to view products by ALPS ***manufacturer:***

Other Similar products are found below :

5GTH92001 5GTH9202242 1-1977120-4 ADTSA62RV ADTSA63KV ADTSA644NV ADTSMW66NV ADTSMW67RV B3F-3123 B3F-6055A B3F-B32-01-KIT 1977177-8 1977266-1 ADTS644KV ADTSA61RV ADTSA62KV ADTSA63NV ADTSA63RV ADTSM21NSVTR ADTSM32NVTR ADTSM61YVTR ADTSM63SVTR ADTSM644KVTR ADTSMW64RV ADTSMW69NV FSMRA4JHA04 GS4.70F300QP 3ESH9R 506E00201 MJTP1164TR 3FTL600RAS 3FTL640RAS Y96K132V0FPLFS 101-TS5022T1601-EV 5GSH92001 KSJ0A231 80SH LFG EVQ-P1D05K MJTP1162TR ADTSM63KV 2-1977120-7 TSJW-5.2-260-TR KMT011MNGJLHS ADTSA648RV 70-201.0 ADTSM62KSVTR ATA600VTR ADTSG66RV ADTS61NV ADTSM62KVTR ADTSM25KSVB