REV.	DATE	ECR NO	DESCRIPTION
NC	05/07/98	--	INITIAL RELEASE
A	07/28/06	--	REVISE PCB MOUNTING LEGS, UPDATE DRAWING FORMAT
B	02/17/10	2012	HARDWARES REMOVED

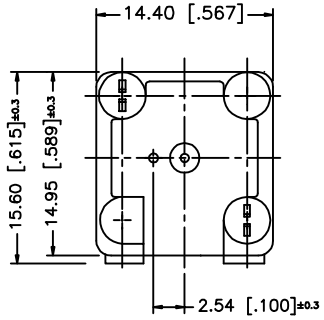

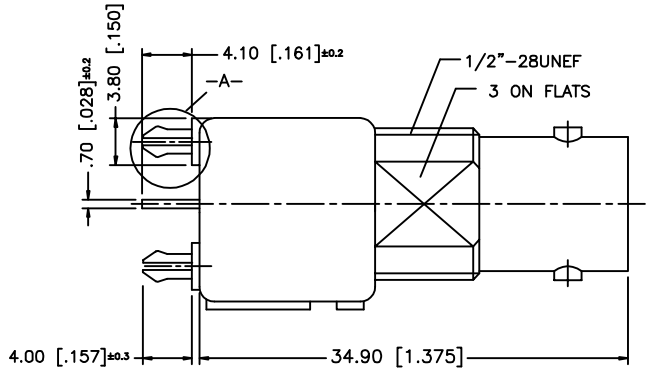

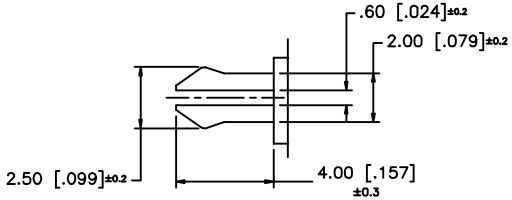

DETAIL -A-
(2X SCALE)

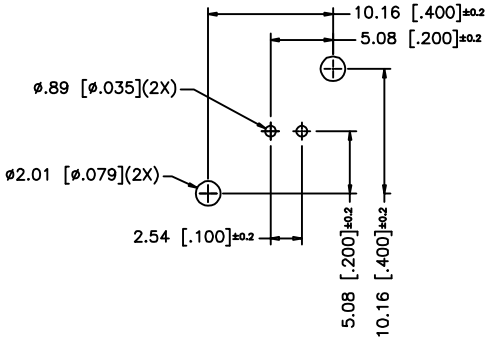

PCB MOUNTING HOLES

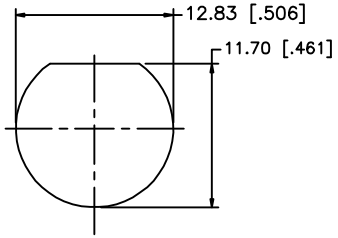

RECOMMENDED
MOUNTING HOLE

	DESCRIPTION	MATERIAL	FINISH
1	BODY	DIE CAST	NICKEL
2	INSULATOR	P.P.	NATURAL
3	CONTACT PIN	PHOS. BRONZE	GOLD
4			
5			
6			
7			
8			

UNLESS OTHERWISE SPECIFIED DIMENSIONS ARE IN MILLIMETERS

DIMENSIONS IN [ ] ARE IN INCHES FOR CUSTOMER REFERANCE ONLY

UNLESS OTHERWISE SPECIFIED TOLERANCES FOR MILLIMETERS ARE:

0.5–6 = ± 0.2
6–30 = ± 0.4
30–120 = ± 0.6
120–315 = ± 1
315–1000 = ± 1.6
1000–2000 = ± 2.4

DO NOT SCALE DRAWING

APPROVALS		DATE
DRAWN	CLEMENT	02/17/10
CHECKED		
ISSUED		

Amphenol Connex

TITLE: BNC STRAIGHT PC MOUNT RECEPT. JACK 50 ohm

SIZE	FSCM NO.	DWG. NO.	REV.
A	99001	112488.DWG	B

SCALE NA | PART NO. 112488 | SHEET 1 OF 1

X-ON Electronics

Largest Supplier of Electrical and Electronic Components

Click to view similar products for RF Connectors / Coaxial Connectors ***category:***

Click to view products by Amphenol ***manufacturer:***

Other Similar products are found below :

8915-1511-000 89674-0827 6001-7071-019 6002-7051-003 6002-7551-202 6059674-1 619550-1 630059-000 M39030/3-01N M3933/25-36N 6500-7071-046 6769 CX050L2AQ 7002-1542-011 7004-1512-000 7009-1511-004 7010-1511-000 7029-1511-060 7101-1541-010 7101-1571-002 7105-1521-002 7145-1521-002 7203-1571-003 7209-1511-011 7210-1511-015 7210-1511-019 73137-5015 73216-2241 7325-1512-000 73404-2300 7405-1521-005 7405-1521-802 7406-1521-005 8527 8547 FS11V 8808-1511-001 9049-9513-000 9074-9513-000 9101-9573-002 910A205F 9130-9573-002 PL11SC-026 PL375-33 PL40-5 PL71-9 PL74C-221 PL75MC-217 PL803-7 980-8666-005