REV.	DATE	DESCRIPTION
NC	06/16/97	INITIAL RELEASE

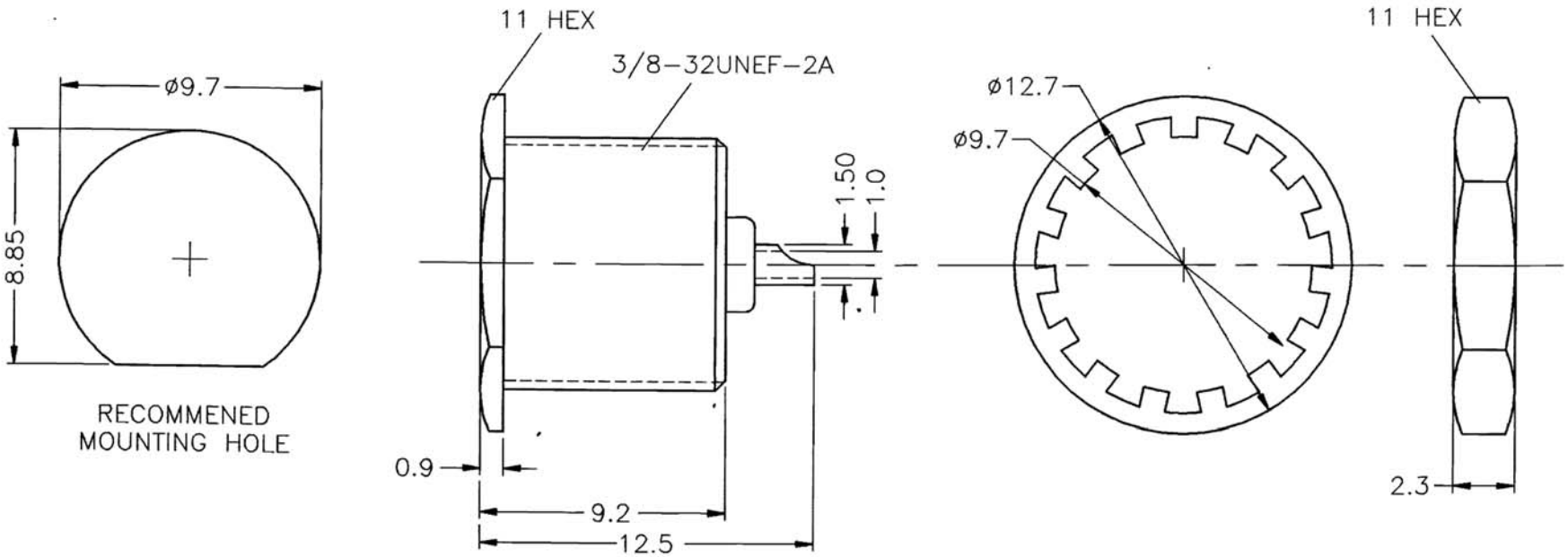

	DESCRIPTION	MATERIAL	FINISH
1	BODY	BRASS	NICKEL
2	INSULATOR	TEFLON	NATURAL
3	CONTACT PIN	BRASS	GOLD
4			
5			
6			
7			
8			

DIMENSIONS ARE IN MILLIMETERS
UNLESS OTHERWISE SPECIFIED TOLERANCES ARE:
0.5–6 = ± 0.2
6–30 = ± 0.4
30–120 = ± 0.6
120–315 = ± 1
315–1000 = ± 1.6
1000–2000 = ± 2.4
DO NOT SCALE DRAWING

APPROVALS		DATE
DRAWN	G.R.S.	06/16/97
CHECKED		
ISSUED		

connex
Connector Corporation

TITLE: SMB BULKHEAD RECESSED RECEPT. JACK

SIZE	FSCM NO.	DWG. NO.	REV.
A	99001	142158.DWG	NC

SCALE	PART NO.	SHEET
4:1	142158	1 OF 1

X-ON Electronics

Largest Supplier of Electrical and Electronic Components

Click to view similar products for RF Connectors / Coaxial Connectors ***category:***

Click to view products by Amphenol ***manufacturer:***

Other Similar products are found below :

8915-1511-000 89674-0827 6001-7071-019 6002-7051-003 6002-7551-202 6059674-1 619550-1 630059-000 M39030/3-01N M3933/25-36N 6500-7071-046 6769 CX050L2AQ 7002-1542-011 7004-1512-000 7009-1511-004 7010-1511-000 7029-1511-060 7101-1541-010 7101-1571-002 7105-1521-002 7145-1521-002 7203-1571-003 7209-1511-011 7210-1511-015 7210-1511-019 73137-5015 73216-2241 7325-1512-000 73404-2300 7405-1521-005 7405-1521-802 7406-1521-005 8527 8547 FS11V 8808-1511-001 9049-9513-000 9074-9513-000 9101-9573-002 910A205F 9130-9573-002 PL11SC-026 PL375-33 PL40-5 PL71-9 PL74C-221 PL75MC-217 PL803-7 980-8666-005