REV.	DATE	DESCRIPTION
A	09/07/04	UPDATE DRAWING FORMAT / MODIFY CONTACT PIN

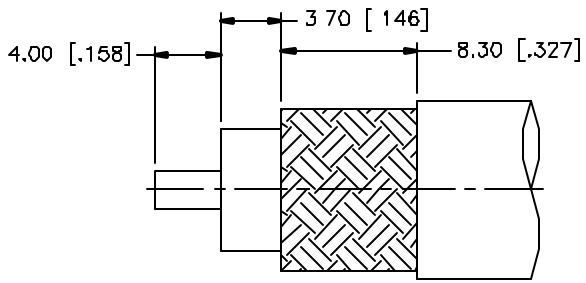

RECOMMENDED
CABLE STRIPPING DIM'S

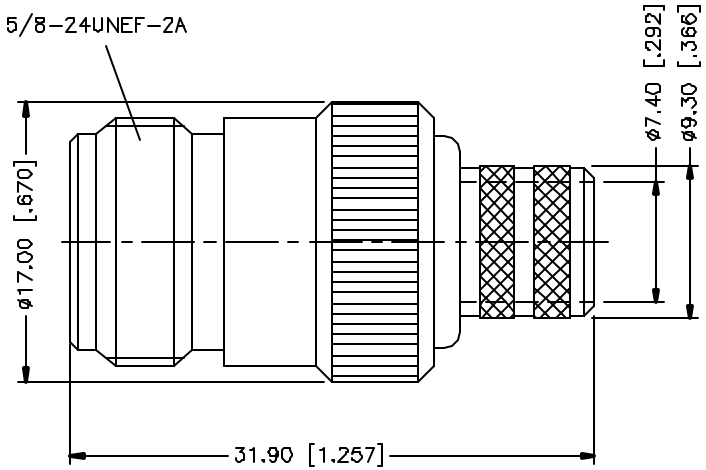

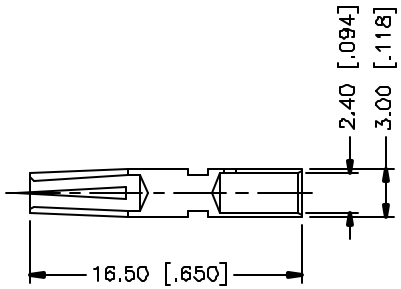

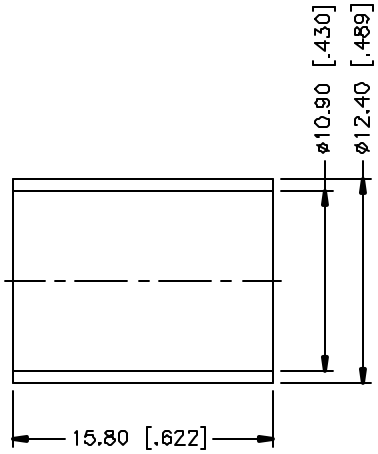

NOTE:

1. CRIMPED FERRULE
   HEX CRIMP SIZE .429"
2. CRIMPED CONTACT PIN
   HEX CRIMP SIZE .100"

	DESCRIPTION	MATERIAL	FINISH	QTY
8				
7				
6				
5				
4	FERRULE	BRASS	NICKEL	1
3	CONTACT PIN	PHOS BRONZE	GOLD	1
2	INSULATOR	TEFLON	NATURAL	1
1	BODY	BRASS	NICKEL	1

UNLESS OTHERWISE SPECIFIED DIMENSIONS ARE IN MILLIMETERS DIMENSIONS IN [ ] ARE IN INCHES AND FOR CUSTOMER REFERANCE ONLY

UNLESS OTHERWISE SPECIFIED TOLERANCES FOR MILLIMETERS ARE
0.5 – 6mm ± 0.20mm
6 – 30mm ± 0.40mm
30 – 120mm ± 0.50mm

UNLESS OTHERWISE SPECIFIED TOLERANCES FOR INCHES ARE
.020 – .315 = ± 0.007"
.315 – 1.180 = ± 0.015"
1.180 – 4.724 = ± 0.020"

DO NOT SCALE DRAWING

APPROVALS		DATE
DRAWN	G.R.S.	09/07/04
CHECKED		
ISSUED		
SHEET	1 OF 1	

CAD FILE C:/172/172105.DWG

Amphenol Connex

PART DESCRIPTION
N STRAIGHT CRIMP JACK
(FOR RG-8/U CABLE)

PART NO. 172105

DWG. NO.	REV	SIZE	SCALE
172105.DWG	A	A	NA

X-ON Electronics

Largest Supplier of Electrical and Electronic Components

Click to view similar products for RF Connectors / Coaxial Connectors ***category:***

Click to view products by Amphenol ***manufacturer:***

Other Similar products are found below :

8915-1511-000 89674-0827 6001-7071-019 6002-7051-003 6002-7551-202 6059674-1 619550-1 630059-000 M39030/3-01N M3933/25-36N 6500-7071-046 6769 CX050L2AQ 7002-1542-011 7004-1512-000 7009-1511-004 7010-1511-000 7029-1511-060 7101-1541-010 7101-1571-002 7105-1521-002 7145-1521-002 7203-1571-003 7209-1511-011 7210-1511-015 7210-1511-019 73137-5015 73216-2241 7325-1512-000 73404-2300 7405-1521-005 7405-1521-802 7406-1521-005 8527 8547 FS11V 8808-1511-001 9049-9513-000 9074-9513-000 9101-9573-002 910A205F 9130-9573-002 PL11SC-026 PL375-33 PL40-5 PL71-9 PL74C-221 PL75MC-217 PL803-7 980-8666-005