| REV. | DATE | DESCRIPTION |
|---|---|---|
| A | 07/21/99 | REFORMAT DRAWING |
| B | 11/12/99 | MODIFY BARREL AND FERRULE DIMENSIONS |
| C | 12/09/03 | UPDATE DRAWING FORMAT |

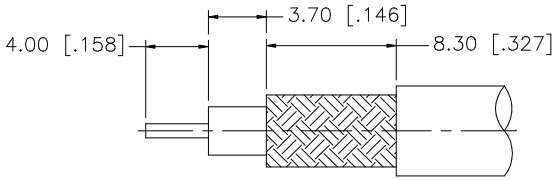


RECOMMENDED
CABLE STRIPPING DIM'S

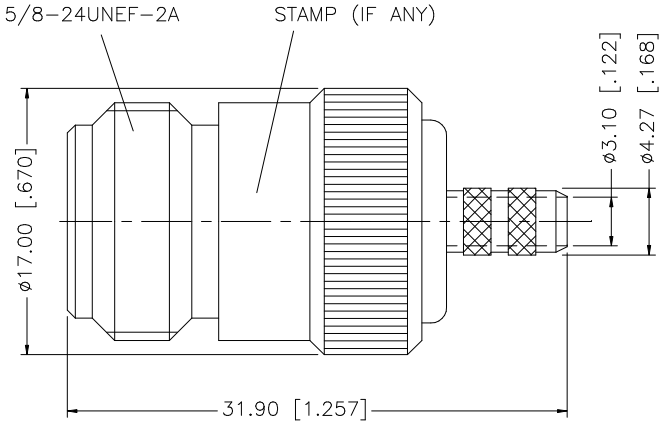


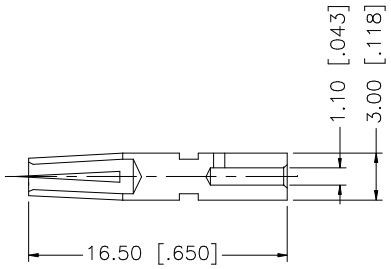


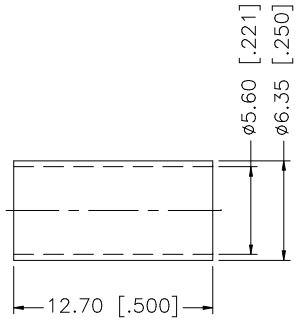


NOTES:

1. CRIMPED FERRULE
   HEX. CRIMP SIZE .213"
2. CRIMPED CONTACT PIN
   HEX. CRIMP SIZE .100"

| | DESCRIPTION | MATERIAL | FINISH | QTY |
|---|---|---|---|---|
| 8 | | | | |
| 7 | | | | |
| 6 | | | | |
| 5 | | | | |
| 4 | FERRULE | COPPER | NEXCOTE | 1 |
| 3 | CONTACT PIN | PHOS. BRONZE | GOLD | 1 |
| 2 | INSULATOR | TEFLON | NATURAL | 1 |
| 1 | BODY | BRASS | NEXCOTE | 1 |

UNLESS OTHERWISE SPECIFIED DIMENSIONS ARE IN MILLIMETERS. DIMENSIONS IN [ ] ARE IN INCHES AND FOR CUSTOMER REFERANCE ONLY.

UNLESS OTHERWISE SPECIFIED TOLERANCES FOR MILLIMETERS ARE:
0.5 – 8mm ± 0.20mm
8 – 30mm ± 0.40mm
30 – 120mm ± 0.50mm

UNLESS OTHERWISE SPECIFIED TOLERANCES FOR INCHES ARE:
.020 – .315 = ± 0.007"
.315 – 1.180 = ± 0.015"
1.180 – 4.724 = ± 0.020"

DO NOT SCALE DRAWING

| APPROVALS | | DATE |
|---|---|---|
| DRAWN | G.R.S. | 12/09/03 |
| CHECKED | | |
| ISSUED | | |
| SHEET | 1 OF 1 | |
| | | |
| CAD FILE | C:/172/172147.DWG | |

Amphenol Connex

PART DESCRIPTION
N CRIMP JACK– CAPTIVE CONTACT
(RG 55/U, 142/U, 223/U, 400/U CABLE – 50ohms)

PART NO. 172147

| DWG. NO. | REV. | SIZE | SCALE |
|---|---|---|---|
| 172147.DWG | NC | A | NA |

# X-ON Electronics

Largest Supplier of Electrical and Electronic Components

***Click to view similar products for*** RF Connectors / Coaxial Connectors ***category:***

***Click to view products by*** Amphenol ***manufacturer:***

Other Similar products are found below :

8915-1511-000 89674-0827 6001-7071-019 6002-7051-003 6002-7551-202 6059674-1 619550-1 630059-000 M39030/3-01N M3933/25-36N 6500-7071-046 6769 CX050L2AQ 7002-1542-011 7004-1512-000 7009-1511-004 7010-1511-000 7029-1511-060 7101-1541-010 7101-1571-002 7105-1521-002 7145-1521-002 7203-1571-003 7209-1511-011 7210-1511-015 7210-1511-019 73137-5015 73216-2241 7325-1512-000 73404-2300 7405-1521-005 7405-1521-802 7406-1521-005 8527 8547 FS11V 8808-1511-001 9049-9513-000 9074-9513-000 9101-9573-002 910A205F 9130-9573-002 PL11SC-026 PL375-33 PL40-5 PL71-9 PL74C-221 PL75MC-217 PL803-7 980-8666-005