NOTES:

1. MATERIALS OF CONSTRUCTION:

   BODY = ZINC DIE CAST, NICKEL PLATED (.000100 MIN. THICK)
   CONTACT PIN = PHOSPHOR BRONZE (QQ-B-750), GOLD FLASH OVER NICKEL PLATED (.000050 MIN THICK)
   POST = COPPER, BRIGHT TIN PLATED (.000080 THICK).
   CONTACT TAILS ARE TIN OVER NICKEL (.000050 THICK)
   FORK PINS (2) = BRASS (QQ-B-613), TIN PLATED
   LOCKWASHER = BRASS (QQ-B-613), NICKEL PLATED (.000100 MIN THICK)
   HOUSING = PBT (UL 94 V-0), COLOR WHITE
   INSULATOR = POLYPROPYLENE (UL 94 HB), COLOR NATURAL
   HEX NUT = BRASS (ASTM-B16 H02, C36000), NICKEL PLATED (.000100 MIN. THICK)

3. MAX. PANEL THICKNESS = 5mm [.197]

31-5486-10RFX	REVISIONS				
DRAWING NO.	REV	DESCRIPTION	DATE	ECO	APPR
THIRD ANGLE PROJ.	A	RELEASE TO MFG.	3/7/02	43981	CPM
	B	SEE SHEET 1	3/6/06	45940	CPM
	C	PICTORAL CHANGE	7/15/13	49574	EW

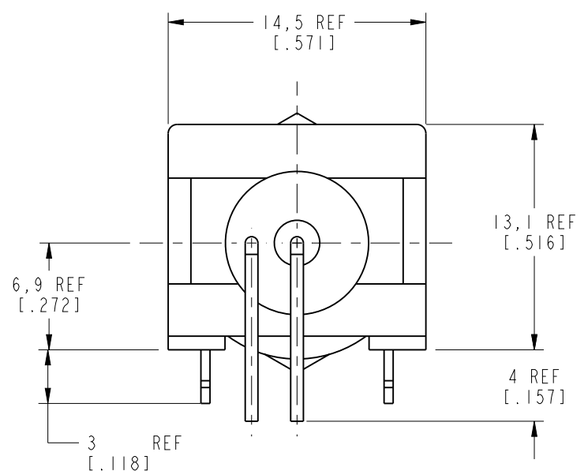

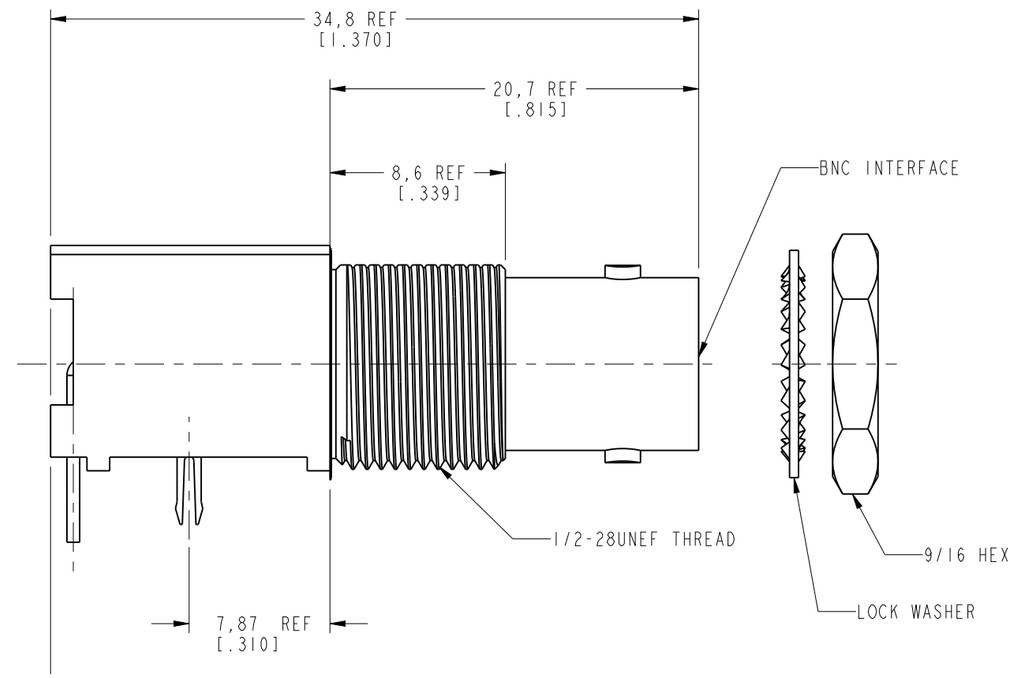

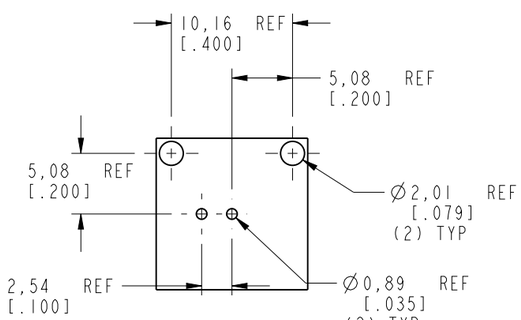

RECOMMENDED MOUNTING HOLE DIMENSIONS
SCALE 2.000

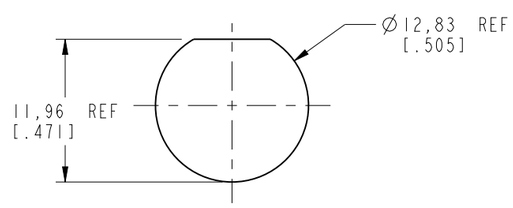

RECOMMENDED MOUNTING HOLE DIMENSIONS
SCALE 2.000

CUSTOMER OUTLINE DRAWING

ALL OTHER SHEETS ARE FOR INTERNAL USE ONLY

UNLESS OTHERWISE SPECIFIED, DIMENSIONS ARE IN MM (INCHES) AND TOLERANCES ARE:

0.5 - 6mm	6 - 30mm	30 - 120mm
±0.2mm	±0.4mm	± 0.6mm

NOTICE - These drawings, specifications, or other data (1) are, and remain the property of Amphenol Corp. (2) must be returned upon request; and (3) are confidential and not to be disclosed to any person other than those to whom they are given by Amphenol Corp. The furnishing of these drawings, specifications, or other data by Amphenol Corp., or to any other person to anyone for any purpose is not to be regarded by implication or otherwise in any manner licensing, granting rights or permitting such holder or any other person to manufacture, use or sell any product, process or design, patented or otherwise, that may in any way be related to or disclosed by said drawings, specifications, or other data.

MATERIAL

REFERENCE
EAR# 363
GEN# 31-5431-10RFX_ASSY

DRAWN C. McGRATH	DATE 2/22/02	TITLE BNC R/A PC MOUNT RECEPTACLE JACK
ENGINEER O. BARTHELMES	DATE 2/22/02	
APPROVED O. BARTHELMES	DATE 2/27/02	
CAD FILE I:\BNC\31-5486-10RFX		

Amphenol
Amphenol Corporation
Communication and Network Products Division
Danbury, CT U.S.A. 06810

SCALE: 3.0:1 | SHEET 2 OF 2

CODE ID	DWG SIZE	DRAWING NO.	REV
74868	B	31-5486-10RFX	C

X-ON Electronics

Largest Supplier of Electrical and Electronic Components

Click to view similar products for RF Connectors / Coaxial Connectors ***category:***

Click to view products by Amphenol ***manufacturer:***

Other Similar products are found below :

8915-1511-000 89674-0827 6001-7071-019 6002-7051-003 6002-7551-202 6059674-1 619550-1 630059-000 M39030/3-01N M3933/25-36N 6500-7071-046 6769 CX050L2AQ 7002-1542-011 7004-1512-000 7009-1511-004 7010-1511-000 7029-1511-060 7101-1541-010 7101-1571-002 7105-1521-002 7145-1521-002 7203-1571-003 7209-1511-011 7210-1511-015 7210-1511-019 73137-5015 73216-2241 7325-1512-000 73404-2300 7405-1521-005 7405-1521-802 7406-1521-005 8527 8547 FS11V 8808-1511-001 9049-9513-000 9074-9513-000 9101-9573-002 910A205F 9130-9573-002 PL11SC-026 PL375-33 PL40-5 PL71-9 PL74C-221 PL75MC-217 PL803-7 980-8666-005