NOTES:

1. MATERIALS AND FINISHES:
   - BODY - ZINC DIE CAST, NICKEL PLATED [.000150 MIN THICK]
   - CONTACT - PHOSPHOR BRONZE, GOLD PLATED [.000003 MIN THICK], OVER TIN PLATING [.000100 MIN THICK], OVER NICKEL PLATING .000050 MIN THICK] GOLD PLATING AT CONTACT AREA, AND TIN OVER NICKEL PLATING OVER ALL
   - INSULATOR - POLYPROPYLENE, UL94V-0
   - GROUND TERMINAL- COPPER WIRE, TIN PLATED [.000100 MIN THICK]
   - LEGS - BRASS, TIN PLATED [.000100 MIN THICK]

2. ELECTRICAL:
   A. IMPEDANCE: 50 OHM

4. PACKAGING:
   A. QUANTITY: BULK PACK OF 50 PER TRAY
   B. MARKING: BAG TO BE MARKED "AMPHENOL, 31-5637, AND DATE CODE"

31-5637	REVISIONS				
DRAWING NO.	REV	DESCRIPTION	DATE	ECO	APPR
THIRD ANGLE PROJ.	A	RELEASE TO MFG.	1/20/93	39301	JM
	B	SEE SHEET 1	3/07/05	45399	CPM
	C	SEE SHEET 1	2/05/08	46944	CPM
	D	SEE SHEET 1	7/15/08	47082	VC
	E	SEE SHEET 1	10/7/08	46939	CPM

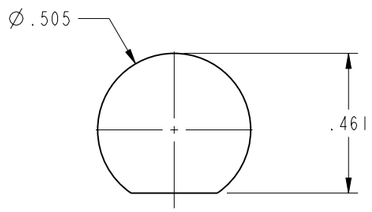

PANEL CUTOUT

SCALE 2.000

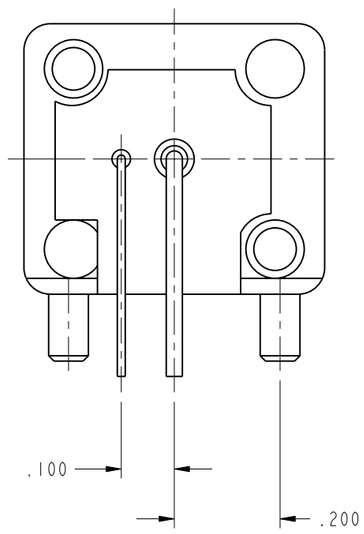

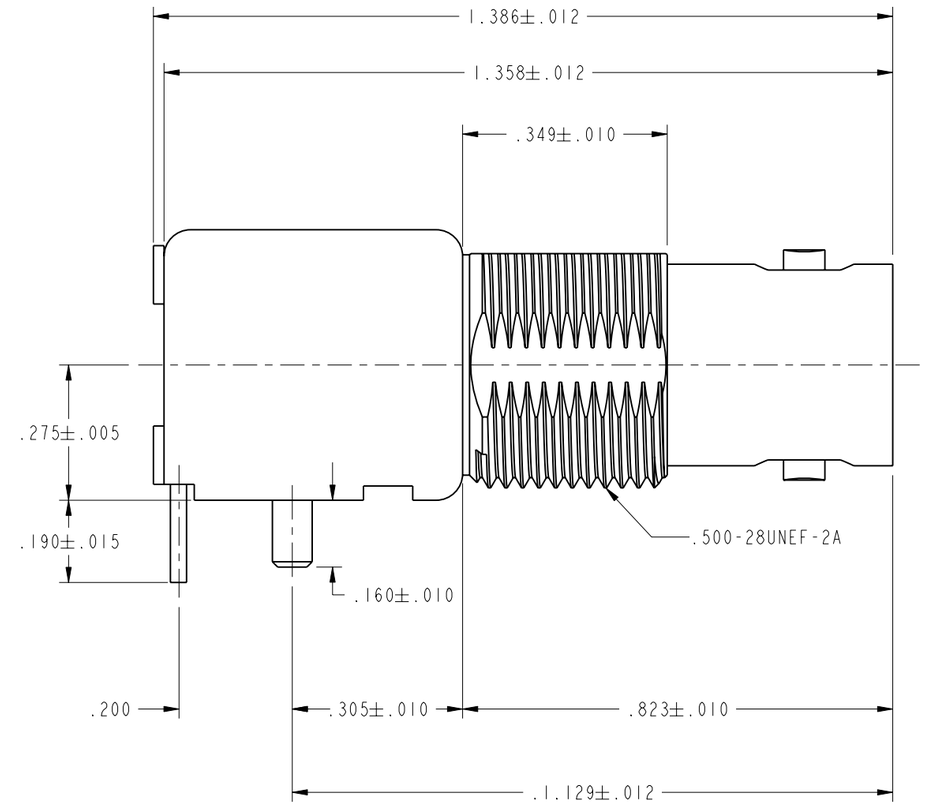

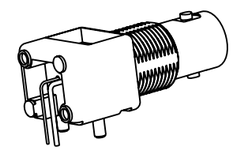

SCALE 1.000

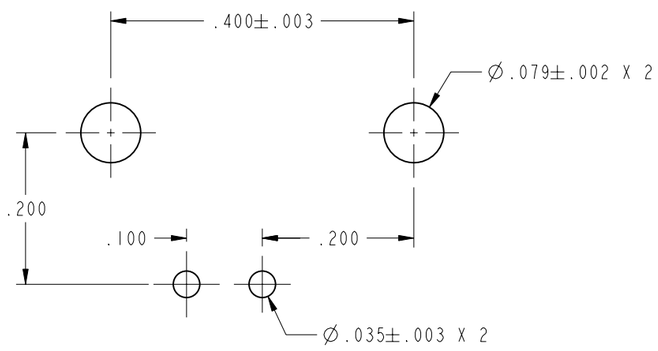

RECOMMENDED PCB LAYOUT

SCALE 5.000

CUSTOMER OUTLINE DRAWING

ALL OTHER SHEETS ARE FOR INTERNAL USE ONLY

UNLESS OTHERWISE SPECIFIED, DIMENSIONS ARE IN INCHES AND TOLERANCES ARE:
2 PLACE DECIMAL ±.015 (0,381 mm) | 3 PLACE DECIMAL ±.005 (0,127 mm) | ANGLES ± 1°

NOTICE - These drawings, specifications, or other data (1) are, and remain the property of Amphenol Corp. (2) must be returned upon request; and (3) are confidential and not to be disclosed to any person other than those to whom they are given by Amphenol Corp. The furnishing of these drawings, specifications, or other data by Amphenol Corp., or to any other person to anyone for any purpose is not to be regarded by implication or otherwise in any manner licensing, granting rights or permitting such holder or any other person to manufacture, use or sell any product, process or design, patented or otherwise, that may in any way be related to or disclosed by said drawings, specifications, or other data.

MATERIAL

REFERENCE
EAR #2272

DRAWN VIVEK.C	DATE 14-May-08	
ENGINEER VIVEK.C	DATE 14-May-08	
APPROVED K. CAPOZZI	DATE 7/15/08	
CAD FILE I:\BNC\31-5637	CODE ID 74868	DWG SIZE B

TITLE
50 OHMS BNC JACK
R/A, PCB, MT,
ZINC DIE CAST HOUSING

Amphenol RF
Danbury, CT, USA
Tainan, Taiwan
Shenzhen, China
www.amphenolrf.com

SCALE: 3.5:1 | SHEET 2 OF 2

DRAWING NO. 31-5637 | REV E

X-ON Electronics

Largest Supplier of Electrical and Electronic Components

Click to view similar products for RF Connectors / Coaxial Connectors ***category:***

Click to view products by Amphenol ***manufacturer:***

Other Similar products are found below :

8915-1511-000 89674-0827 6001-7071-019 6002-7051-003 6002-7551-202 6059674-1 619550-1 630059-000 M39030/3-01N M3933/25-36N 6500-7071-046 6769 CX050L2AQ 7002-1542-011 7004-1512-000 7009-1511-004 7010-1511-000 7029-1511-060 7101-1541-010 7101-1571-002 7105-1521-002 7145-1521-002 7203-1571-003 7209-1511-011 7210-1511-015 7210-1511-019 73137-5015 73216-2241 7325-1512-000 73404-2300 7405-1521-005 7405-1521-802 7406-1521-005 8527 8547 FS11V 8808-1511-001 9049-9513-000 9074-9513-000 9101-9573-002 910A205F 9130-9573-002 PL11SC-026 PL375-33 PL40-5 PL71-9 PL74C-221 PL75MC-217 PL803-7 980-8666-005