Copyright FCI

FCIconnect.com

PRODUCT NUMBER
SEE TABLE

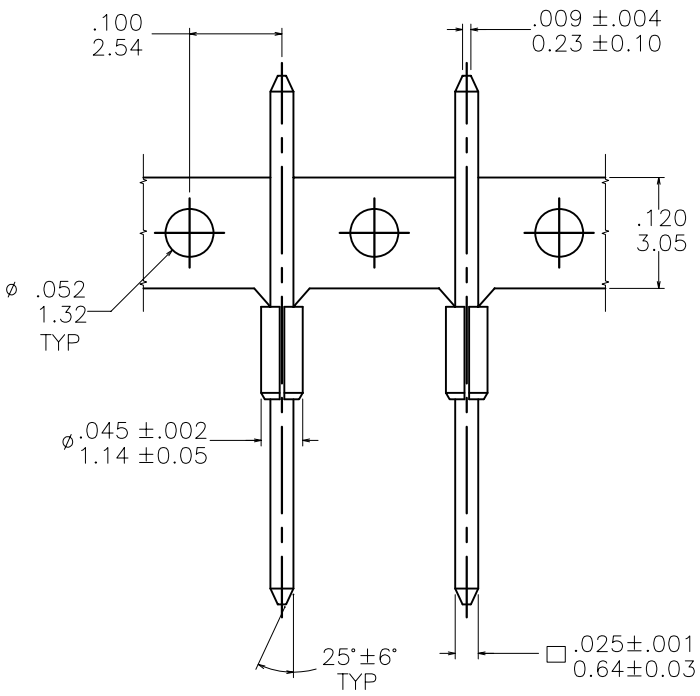

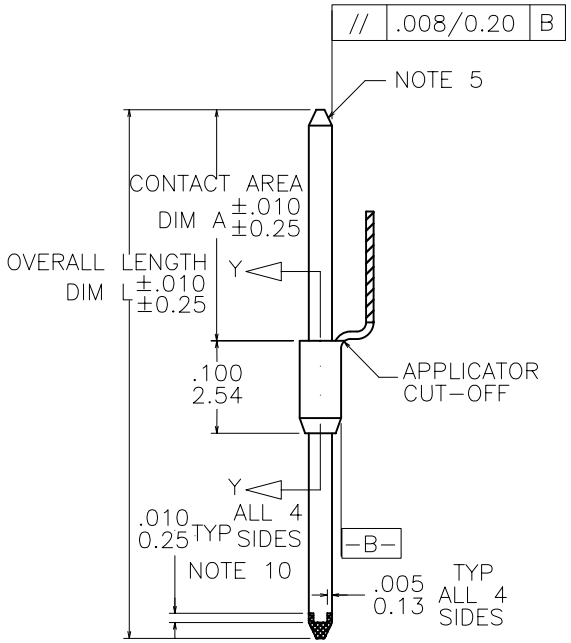

mat'l. code				surface	tolerance	projection	product family
SEE NOTE 1				ASME Y14.5	ASME Y14.5		PIN PRODUCTS
ltr	ecn no	dr	date	tolerances unless otherwise specified			title
EJ	V22753	JWB	1992-07-21	angles	linear .XX±.01/.X±.3	INCH/MM	BERGPOST® .200"[5.08]cc WITH RETENTION NICKS
EK	V60730	EPK	1996-06-18		.XXX±.005/.XX±.13		
EL	V71494	HTB	1997-10-24	0°±2°	.XXXX±.0020/.XXX±.051	scale 5:1	
EM	V01594	JRW	2000-07-11	dr	J.W. BAIR 1992-07-21		dwg no 47310 sheet 1 of 6 size A4
EN	V05-0387	HTB	2005-04-26	engr	E. IORFIDO 1992-07-21		
EP	V06-0685	HTB	2006-07-25	chr	E. IORFIDO 1992-07-21		
ER	V08-0379	HTB	2008-08-28	appd	E. IORFIDO 1992-07-21		type CUSTOMER Drawing

sheet index	revision	ER	ER	ER	ER	ER	ER
	sheet	1	2	3	4	5	6

form: A4mmXLc

PDM: Rev:ER STATUS Released Printed: Jul 14, 2012

Copyright FCI

FCIconnect.com

PRODUCT NUMBER
SEE TABLE

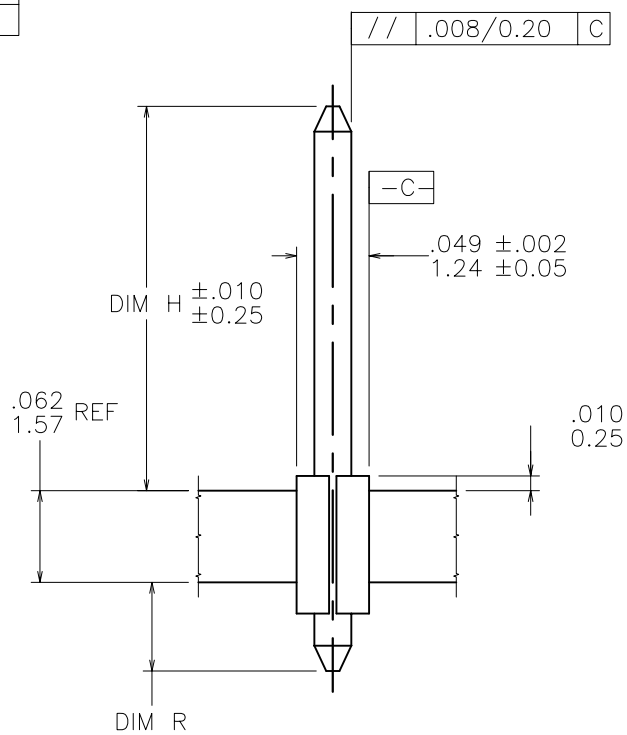

SECTION THRU P.C. BOARD

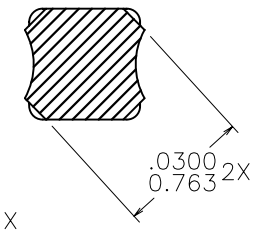

SECTION X-X
SCALE 3:1

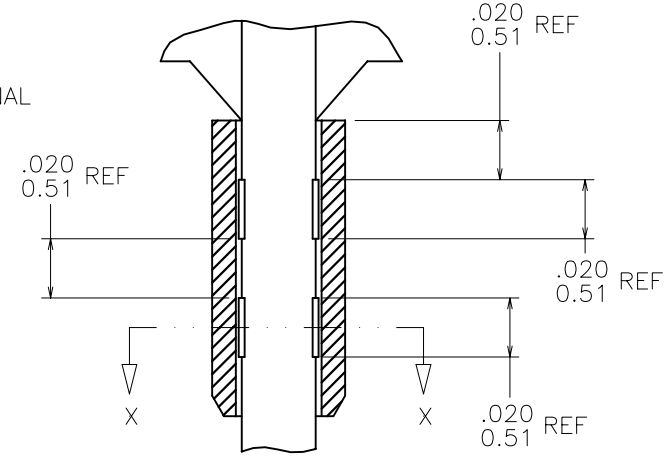

SECTION Y-Y
SCALE 2:1

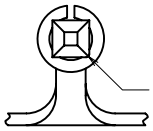

NOTE 6

mat'l. code	surface	tolerance	projection	product family
SEE NOTE 1	ASME Y14.5	ASME Y14.5		PIN PRODUCTS

ltr	ecn no	dr	date
ER			

tolerances unless otherwise specified

angles	linear	
0°±2°		.XX±.01/.X±.3
		.XXX±.005/.XX±.13
		.XXXX±.0020/.XXX±.051

INCH/MM

scale 10:1

title: BERGPOST® .200"[5.08]cc WITH RETENTION NICKS

dr	J.W. BAIR	1992-07-21
engr	E. IORFIDO	1992-07-21
chr	E. IORFIDO	1992-07-21
appd	E. IORFIDO	1992-07-21

dwg no: 47310 sheet 2 of 6 size A4

type: CUSTOMER Drawing

sheet index	revision sheet

form: A4mmXLc

PDM: Rev:ER STATUS Released Printed: Jul 14, 2012

Copyright FCI

FCIconnect.com

PRODUCT NUMBER
SEE TABLE

PLATING CODE	PLATING	UNDERPLATING
1	30μ" [0.76μ] Au	50μ" [1.27μ] Ni
2	U N A S S I G N E D	
3	50μ" [1.27μ] Au	50μ" [1.27μ] Ni
4	~~120μ" [3.05μ] 93/7 SnPb~~	~~50μ" [1.27μ] Ni~~ — DISCONTINUED
	100μ" [2.54μ] Sn (NOTE 12)	50μ" [1.27μ] Ni
5	30μ" [0.76μ] GXT™	50μ" [1.27μ] Ni
6	15μ" [0.38μ] GXT™	50μ" [1.27μ] Ni
7	U N A S S I G N E D	
8	U N A S S I G N E D	
9	15μ" [0.38μ] Au	50μ" [1.27μ] Ni

NOTES:

1. MAT'L: POST, 3/4 HD. PHOS-BRONZE ASTM B-159-66 FERRULE, 1/2 HARD CARTRIGE BRASS ASTM - B-36-67.
2. SEE PRODUCT SPECIFICATION BUS-12-040 FOR P.C. BOARD HOLE DIAMETER AND P.C. BOARD PLATING INFORMATION.
3. CENTER LINE OF THE TERMINAL MUST BE IN TRUE POSITION IN RESPECT TO THE HOLE AXIS, WITHIN .015 [0.38] DIA. AFTER INSERTION IN P.C. BOARD.
4. BURNISH MARKS PERMITTED ON PINS.
5. TWO SIDES OF LEAD-IN NOT PLATED. TYP BOTH ENDS.
6. .002 [0.05] MAX. RADIUS (4X) ON WIRE WRAP PORTION OF THE POST.
7. POST TO FERRULE RETENTION 12.0 LBS [53.4 NS.] MIN. BEFORE STAKING.
8. POST IS BONDED TO FERRULE BY REFLOWING.
9. .015 [0.38] MAX SOLDER PERMISSIBLE ABOVE AND BELOW THE FERRULE ON THE SURFACE OF THE POST.
10. SOLDER SPOTS PERMISSIBLE IN SHADED AREA ONLY, BELOW FERRULE.
11. ADD AN LF SUFFIX TO PART NUMBERS FOR PRODUCT THAT MEETS EUROPEAN UNION DIRECTIVES AND OTHER COUNTRY REGULATIONS AS DESCRIBED IN GS-22-008. PLATING CODE 4 AVAILABLE AS LF (TIN) ONLY.
12. THIS PRODUCT HAS 100% TIN PLATING IN THE INTERFACE AND HAS NOT BEEN TESTED FOR WHISKER GROWTH IN ALL INTERCONNECT ENVIRONMENTS.

mat'l. code: SEE NOTE 1	surface: ASME Y14.5	tolerance: ASME Y14.5	projection
ltr / ecn no / dr / date	tolerances unless otherwise specified		product family: PIN PRODUCTS
ER	angles: 0°±2°	linear: .XX±.01/.X±.3; .XXX±.005/.XX±.13; .XXXX±.0020/.XXX±.051	INCH/MM
			title: BERGPOST® .200"[5.08]cc WITH RETENTION NICKS
	dr: J.W. BAIR 1992-08-03		scale 1:1
	engr: E. IORFIDO 1992-08-03		dwg no: 47310 — sheet 3 of 6 — size A4
	chr: E. IORFIDO 1992-08-03		
	appd: E. IORFIDO 1992-08-03		type: CUSTOMER Drawing
sheet index / revision sheet			

form: A4mmXLc

PDM: Rev:ER STATUS Released Printed: Jul 14, 2012

Copyright FCI

FCIconnect.com

PRODUCT NUMBER NOTE 20	CONTACT AREA DIM A	DIM H	OVERALL LENGTH DIM L	DIM R	PLATING CODE
47310-000	~~.308 / 7.82~~	~~.328 / 8.33~~	~~.450 / 11.43~~	~~.060 / 1.52~~	OBSOLETE
47310-000LF	.308 / 7.82	.328 / 8.33	.450 / 11.43	.060 / 1.52	4
47311-000	SUPERCEDED BY 48124-000				
47312-000	~~.698 / 17.73~~	~~.718 / 18.24~~	~~.840 / 21.34~~	~~.060 / 1.52~~	OBSOLETE
47312-000LF	.698 / 17.73	.718 / 18.24	.840 / 21.34	.060 / 1.52	4
47313-000	~~.748 / 19.00~~	~~.768 / 19.51~~	~~.890 / 22.61~~	~~.060 / 1.52~~	OBSOLETE
47313-000LF	.748 / 19.00	.768 / 19.51	.890 / 22.61	.060 / 1.52	4
47314-000	~~.558 / 14.17~~	~~.578 / 14.68~~	~~1.210 / 30.73~~	~~.570 / 14.48~~	OBSOLETE
47314-000LF	.558 / 14.17	.578 / 14.68	1.210 / 30.73	.570 / 14.48	4
47315-000	~~.558 / 14.17~~	~~.578 / 14.68~~	~~1.400 / 35.56~~	~~.760 / 19.30~~	OBSOLETE
47315-000LF	.558 / 14.17	.578 / 14.68	1.400 / 35.56	.760 / 19.30	4
47316-000	~~.698 / 17.73~~	~~.718 / 18.24~~	~~1.485 / 37.72~~	~~.705 / 17.91~~	OBSOLETE
47316-000LF	.698 / 17.73	.718 / 18.24	1.485 / 37.72	.705 / 17.91	4
47317-000	~~.228 / 5.79~~	~~.248 / 6.30~~	~~.370 / 9.40~~	~~.060 / 1.52~~	OBSOLETE
47317-000LF	.228 / 5.79	.248 / 6.30	.370 / 9.40	.060 / 1.52	4
47318-000	~~.558 / 14.17~~	~~.578 / 14.68~~	~~.880 / 22.35~~	~~.240 / 6.10~~	OBSOLETE
47318-000LF	.558 / 14.17	.578 / 14.68	.880 / 22.35	.240 / 6.10	4
47319-000	~~.583 / 14.81~~	~~.603 / 15.32~~	~~1.000 / 25.40~~	~~.335 / 8.51~~	OBSOLETE
47319-000LF	.583 / 14.81	.603 / 15.32	1.000 / 25.40	.335 / 8.51	4
47330-000	.308 / 7.82	.328 / 8.33	.450 / 11.43	.060 / 1.52	1
47330-000LF	.308 / 7.82	.328 / 8.33	.450 / 11.43	.060 / 1.52	1
47331-000	SUPERCEDED BY 48032-000				
47332-000LF	.698 / 17.73	.718 / 18.24	.840 / 21.34	.060 / 1.52	1
47332-000	.698 / 17.73	.718 / 18.24	.840 / 21.34	.060 / 1.52	1
47333-000	SUPERCEDED BY 48021-000				
47334-000	.558 / 14.17	.578 / 14.68	1.210 / 30.73	.570 / 14.48	1
47334-000LF	.558 / 14.17	.578 / 14.68	1.210 / 30.73	.570 / 14.48	1
47335-000	.558 / 14.17	.578 / 14.68	1.400 / 35.56	.760 / 19.30	1
47335-000LF	.558 / 14.17	.578 / 14.68	1.400 / 35.56	.760 / 19.30	1
47336-000	.698 / 17.73	.718 / 18.24	1.485 / 37.72	.705 / 17.91	1
47336-000LF	.698 / 17.73	.718 / 18.24	1.485 / 37.72	.705 / 17.91	1
47337-000	.228 / 5.79	.248 / 6.30	.370 / 9.40	.060 / 1.52	1
47337-000LF	.228 / 5.79	.248 / 6.30	.370 / 9.40	.060 / 1.52	1
47338-000	.558 / 14.17	.578 / 14.68	.880 / 22.35	.240 / 6.10	1
47338-000LF	.558 / 14.17	.578 / 14.68	.880 / 22.35	.240 / 6.10	1

PRODUCT NUMBER NOTE 20	CONTACT AREA DIM A	DIM H	OVERALL LENGTH DIM L	DIM R	NOTES
47340-000	.380 / 9.65	.400 / 10.16	.520 / 13.21	.058 / 1.47	3
47340-000LF	.380 / 9.65	.400 / 10.16	.520 / 13.21	.058 / 1.47	3
47341-000	.520 / 13.21	.540 / 13.72	.662 / 16.81	.060 / 1.52	3
47341-000LF	.520 / 13.21	.540 / 13.72	.662 / 16.81	.060 / 1.52	3
47342-000	.380 / 9.65	.400 / 10.16	.772 / 19.61	.320 / 8.13	3
47342-000LF	.380 / 9.65	.400 / 10.16	.772 / 19.61	.320 / 8.13	3
47343-000	.520 / 13.21	.540 / 13.72	.912 / 23.16	.320 / 8.13	3
47343-000LF	.520 / 13.21	.540 / 13.72	.912 / 23.16	.320 / 8.13	3
47344-000	~~.380 / 9.65~~	~~.400 / 10.16~~	~~.522 / 13.26~~	~~.060 / 1.52~~	OBSOLETE
47344-000LF	.380 / 9.65	.400 / 10.16	.522 / 13.26	.060 / 1.52	4
47345-000	~~.520 / 13.21~~	~~.540 / 13.72~~	~~.662 / 16.81~~	~~.060 / 1.52~~	OBSOLETE
47345-000LF	.520 / 13.21	.540 / 13.72	.662 / 16.81	.060 / 1.52	4
47346-000	~~.380 / 9.65~~	~~.400 / 10.16~~	~~.772 / 19.61~~	~~.320 / 8.13~~	OBSOLETE
47346-000LF	.380 / 9.65	.400 / 10.16	.772 / 19.61	.320 / 8.13	4
47347-000	~~.520 / 13.21~~	~~.540 / 13.72~~	~~.912 / 23.16~~	~~.320 / 8.13~~	OBSOLETE
47347-000LF	.520 / 13.21	.540 / 13.72	.912 / 23.16	.320 / 8.13	4
47349-000	.228 / 5.79	.248 / 6.30	.550 / 13.97	.240 / 6.10	3
47349-000LF	.228 / 5.79	.248 / 6.30	.550 / 13.97	.240 / 6.10	3
47350-000	.323 / 8.20	.343 / 8.71	.463 / 11.76	.058 / 1.47	3
47350-000LF	.323 / 8.20	.343 / 8.71	.463 / 11.76	.058 / 1.47	3
47350-001	.323 / 8.20	.343 / 8.71	.463 / 11.76	.058 / 1.47	1
47350-001LF	.323 / 8.20	.343 / 8.71	.463 / 11.76	.058 / 1.47	1
47351-000	.573 / 14.55	.593 / 15.06	.715 / 18.16	.060 / 1.52	3
47351-000LF	.573 / 14.55	.593 / 15.06	.715 / 18.16	.060 / 1.52	3
47352-000	.698 / 17.73	.718 / 18.24	.840 / 21.34	.060 / 1.52	3
47352-000LF	.698 / 17.73	.718 / 18.24	.840 / 21.34	.060 / 1.52	3
47353-000	.763 / 19.38	.783 / 19.89	.905 / 22.99	.060 / 1.52	3
47353-000LF	.763 / 19.38	.783 / 19.89	.905 / 22.99	.060 / 1.52	3
47354-000	.573 / 14.55	.593 / 15.06	1.240 / 31.50	.585 / 14.86	3
47354-000LF	.573 / 14.55	.593 / 15.06	1.240 / 31.50	.585 / 14.86	3
47355-000	.573 / 14.55	.593 / 15.06	1.430 / 36.32	.775 / 19.69	3
47355-000LF	.573 / 14.55	.593 / 15.06	1.430 / 36.32	.775 / 19.69	3

mat'l. code: SEE NOTE 1	surface: ASME Y14.5	tolerance: ASME Y14.5	projection
ltr / ecn no / dr / date	tolerances unless otherwise specified		
ER	angles: 0°±2°	linear: .XX±.01/.X±.3; .XXX±.005/.XX±.13; .XXXX±.0020/.XXX±.051	INCH/MM
			scale 1:1
	dr: J.W. BAIR 1992-08-03		
	engr: E. IORFIDO 1992-08-03		
	chr: E. IORFIDO 1992-08-03		
	appd: E. IORFIDO 1992-08-03		
sheet index / revision sheet			

product family: PIN PRODUCTS

title: BERGPOST® .200"[5.08]cc WITH RETENTION NICKS

dwg no: 47310 — sheet 4 of 6 — size A4

type: CUSTOMER Drawing

form: A4mmXLc

Copyright FCI

FCIconnect.com

PRODUCT NUMBER NOTE 20	CONTACT AREA DIM A	DIM H	OVERALL LENGTH DIM L	DIM R	PLATING CODE
47356-000	.698 / 17.73	.718 / 18.24	1.485 / 37.72	.705 / 17.91	3
47356-000LF	.698 / 17.73	.718 / 18.24	1.485 / 37.72	.705 / 17.91	3
47357-000	.228 / 5.79	.248 / 6.30	.370 / 9.40	.060 / 1.52	3
47357-000LF	.228 / 5.79	.248 / 6.30	.370 / 9.40	.060 / 1.52	3
47358-000	.573 / 14.55	.593 / 15.06	.895 / 22.73	.240 / 6.10	3
47358-000LF	.573 / 14.55	.593 / 15.06	.895 / 22.73	.240 / 6.10	3
47359-000	.448 / 11.38	.468 / 11.89	.590 / 14.99	.060 / 1.52	3
47359-000LF	.448 / 11.38	.468 / 11.89	.590 / 14.99	.060 / 1.52	3
47359-001	.448 / 11.38	.468 / 11.89	.590 / 14.99	.060 / 1.52	1
47359-001LF	.448 / 11.38	.468 / 11.89	.590 / 14.99	.060 / 1.52	1
47600-000	~~.485 / 12.32~~	~~.505 / 12.83~~	~~.960 / 24.38~~	~~.393 / 9.98~~	OBSOLETE
47600-000LF	.485 / 12.32	.505 / 12.83	.960 / 24.38	.393 / 9.98	4
47762-000	.380 / 9.65	.400 / 10.16	.522 / 13.26	.060 / 1.52	1
47762-000LF	.380 / 9.65	.400 / 10.16	.522 / 13.26	.060 / 1.52	1
47799-000	.583 / 14.81	.603 / 15.32	1.000 / 25.40	.335 / 8.51	1
47799-000LF	.583 / 14.81	.603 / 15.32	1.000 / 25.40	.335 / 8.51	1
47800-000	.520 / 13.21	.540 / 13.72	.912 / 23.16	.320 / 8.13	1
47800-000LF	.520 / 13.21	.540 / 13.72	.912 / 23.16	.320 / 8.13	1
47804-000	.558 / 14.17	.578 / 14.68	.700 / 17.78	.060 / 1.52	3
47804-000LF	.558 / 14.17	.578 / 14.68	.700 / 17.78	.060 / 1.52	3
47816-000	.615 / 15.62	.628 / 15.95	1.010 / 25.65	.320 / 8.13	3
47816-000LF	.615 / 15.62	.628 / 15.95	1.010 / 25.65	.320 / 8.13	3
47824-000	~~.323 / 8.20~~	~~.343 / 8.71~~	~~.465 / 11.81~~	~~.060 / 1.52~~	OBSOLETE
47824-000LF	.323 / 8.20	.343 / 8.71	.465 / 11.81	.060 / 1.52	4
47868-000	SUPERCEDED BY 48031-000				
47870-000	SUPERCEDED BY 48034-000				
47871-000	SUPERCEDED BY 48033-000				
47998-000	.380 / 9.65	.400 / 10.16	.710 / 18.03	.248 / 6.30	3
47998-000LF	.380 / 9.65	.400 / 10.16	.710 / 18.03	.248 / 6.30	3
48004-000	~~.308 / 7.82~~	~~.328 / 8.33~~	~~.450 / 11.43~~	~~.060 / 1.52~~	OBSOLETE
48004-000LF	.308 / 7.82	.328 / 8.33	.450 / 11.43	.060 / 1.52	4
48005-000	SUPERCEDED BY 48035-000				
48006-000	SUPERCEDED BY 48036-000				

PRODUCT NUMBER NOTE 20	CONTACT AREA DIM A	DIM H	OVERALL LENGTH DIM L	DIM R	PLATING CODE
48008-000	.255 / 6.48	.275 / 6.99	.772 / 19.61	.435 / 11.05	3
48008-000LF	.255 / 6.48	.275 / 6.99	.772 / 19.61	.435 / 11.05	3
48009-000	.255 / 6.48	.275 / 6.99	.642 / 16.31	.305 / 7.75	3
48009-000LF	.255 / 6.48	.275 / 6.99	.642 / 16.31	.305 / 7.75	3
48010-000	.651 / 16.54	.671 / 17.04	.793 / 20.14	.060 / 1.52	1
48010-000LF	.651 / 16.54	.671 / 17.04	.793 / 20.14	.060 / 1.52	1
48011-000	~~.500 / 12.70~~	~~.520 / 13.21~~	~~.640 / 16.26~~	~~.058 / 1.47~~	OBSOLETE
48011-000LF	.500 / 12.70	.520 / 13.21	.640 / 16.26	.058 / 1.47	4
48019-000	.250 / 6.35	.270 / 6.86	.572 / 14.53	.240 / 6.10	1
48019-000LF	.250 / 6.35	.270 / 6.86	.572 / 14.53	.240 / 6.10	1
48020-000	.250 / 6.35	.270 / 6.86	.390 / 9.91	.058 / 1.47	1
48020-000LF	.250 / 6.35	.270 / 6.86	.390 / 9.91	.058 / 1.47	1
48021-000	.750 / 19.05	.770 / 19.56	.892 / 22.66	.060 / 1.52	1
48021-000LF	.750 / 19.05	.770 / 19.56	.892 / 22.66	.060 / 1.52	1
48022-000	.380 / 9.65	.400 / 10.16	.880 / 22.35	.418 / 10.62	1
48022-000LF	.380 / 9.65	.400 / 10.16	.880 / 22.35	.418 / 10.62	1
48028-000	.280 / 7.11	.300 / 7.62	.552 / 14.02	.190 / 4.83	1
48028-000LF	.280 / 7.11	.300 / 7.62	.552 / 14.02	.190 / 4.83	1
48031-000	.583 / 14.81	.603 / 15.32	1.075 / 27.31	.410 / 10.41	1
48031-000LF	.583 / 14.81	.603 / 15.32	1.075 / 27.31	.410 / 10.41	1
48032-001	.558 / 14.17	.578 / 14.68	.700 / 17.78	.060 / 1.52	1
48032-001LF	.558 / 14.17	.578 / 14.68	.700 / 17.78	.060 / 1.52	1
48033-000	.390 / 9.91	.410 / 10.41	1.075 / 27.31	.603 / 15.32	1
48033-000LF	.390 / 9.91	.410 / 10.41	1.075 / 27.31	.603 / 15.32	1
48034-000	.240 / 6.10	.260 / 6.60	.732 / 18.59	.410 / 10.41	1
48034-000LF	.240 / 6.10	.260 / 6.60	.732 / 18.59	.410 / 10.41	1
48035-000	.630 / 16.00	.650 / 16.51	1.122 / 28.50	.410 / 10.41	1
48035-000LF	.630 / 16.00	.650 / 16.51	1.122 / 28.50	.410 / 10.41	1
48036-000	.390 / 9.91	.410 / 10.41	1.122 / 28.50	.650 / 16.51	1
48036-000LF	.390 / 9.91	.410 / 10.41	1.122 / 28.50	.650 / 16.51	1
48042-000	.338 / 8.59	.358 / 9.09	.478 / 12.14	.058 / 1.47	1
48042-000LF	.338 / 8.59	.358 / 9.09	.478 / 12.14	.058 / 1.47	1

mat'l. code: SEE NOTE 1	surface: ASME Y14.5	tolerance: ASME Y14.5	projection
ltr / ecn no / dr / date	tolerances unless otherwise specified		
ER	angles: 0°±2°	linear: .XX±.01/.X±.3; .XXX±.005/.XX±.13; .XXXX±.0020/.XXX±.051	INCH/MM
			scale 1:1
	dr: J.W. BAIR 1992-08-03		
	engr: E. IORFIDO 1992-08-03		
	chr: E. IORFIDO 1992-08-03		
	appd: E. IORFIDO 1992-08-03		
sheet index / revision sheet			

product family: PIN PRODUCTS

title: BERGPOST® .200"[5.08]cc WITH RETENTION NICKS

dwg no: 47310 sheet 5 of 6 size A4

type: CUSTOMER Drawing

form: A4mmXLc

PDM: Rev:ER STATUS Released Printed: Jul 14, 2012

Copyright FCI

FCIconnect.com

PRODUCT NUMBER NOTE 20	CONTACT AREA DIM A	DIM H	OVERALL LENGTH DIM L	DIM R	PLATING CODE
48081-000	~~.573 / 14.55~~	~~.593 / 15.06~~	~~.895 / 22.73~~	~~.240 / 6.10~~	OBSOLETE
48081-000LF	.573 / 14.55	.593 / 15.06	.895 / 22.73	.240 / 6.10	4
48084-000	.308 / 7.82	.328 / 8.33	.450 / 11.43	.060 / 1.52	1
48084-000LF	.308 / 7.82	.328 / 8.33	.450 / 11.43	.060 / 1.52	1
48087-000	.250 / 6.35	.270 / 6.86	.650 / 16.51	.318 / 8.08	1
48087-000LF	.250 / 6.35	.270 / 6.86	.650 / 16.51	.318 / 8.08	1
48089-000	~~.228 / 5.79~~	~~.248 / 6.30~~	~~.550 / 13.97~~	~~.240 / 6.10~~	OBSOLETE
48089-000LF	.228 / 5.79	.248 / 6.30	.550 / 13.97	.240 / 6.10	4
48114-001	~~.380 / 9.65~~	~~.400 / 10.16~~	~~.960 / 24.38~~	~~.498 / 12.65~~	OBSOLETE
48114-001LF	.380 / 9.65	.400 / 10.16	.960 / 24.38	.498 / 12.65	4
48122-000	~~.698 / 17.73~~	~~.718 / 18.24~~	~~1.000 / 25.40~~	~~.225 / 5.72~~	OBSOLETE
48122-000LF	.698 / 17.73	.718 / 18.24	1.000 / 25.40	.225 / 5.72	4
48124-000	~~.558 / 14.17~~	~~.578 / 14.68~~	~~.700 / 17.78~~	~~.060 / 1.52~~	OBSOLETE
48124-000LF	.558 / 14.17	.578 / 14.68	.700 / 17.78	.060 / 1.52	4
48179-000	.755 / 19.18	.775 / 19.69	1.260 / 32.00	.420 / 10.67	1
48179-000LF	.755 / 19.18	.775 / 19.69	1.260 / 32.00	.420 / 10.67	1
48206-000	~~.228 / 5.79~~	~~.248 / 6.30~~	~~.368 / 9.35~~	~~.058 / 1.47~~	OBSOLETE
48206-000LF	.228 / 5.79	.248 / 6.30	.368 / 9.35	.058 / 1.47	4
48217-000	.400 / 10.16	.420 / 10.67	.892 / 22.66	.410 / 10.41	1
48217-000LF	.400 / 10.16	.420 / 10.67	.892 / 22.66	.410 / 10.41	1
48218-000	.630 / 16.00	.650 / 16.51	.770 / 19.56	.058 / 1.47	1
48218-000LF	.630 / 16.00	.650 / 16.51	.770 / 19.56	.058 / 1.47	1
48219-000	.583 / 14.81	.603 / 15.32	1.075 / 27.31	.410 / 10.41	9
48219-000LF	.583 / 14.81	.603 / 15.32	1.075 / 27.31	.410 / 10.41	9
48220-000	.558 / 14.17	.578 / 14.68	.700 / 17.78	.060 / 1.52	9
48220-000LF	.558 / 14.17	.578 / 14.68	.700 / 17.78	.060 / 1.52	9
48221-000	.390 / 9.91	.410 / 10.41	1.075 / 27.31	.603 / 15.32	9
48221-000LF	.390 / 9.91	.410 / 10.41	1.075 / 27.31	.603 / 15.32	9
48222-000	.240 / 6.10	.260 / 6.60	.732 / 18.59	.410 / 10.41	9
48222-000LF	.240 / 6.10	.260 / 6.60	.732 / 18.59	.410 / 10.41	9
48223-000	.630 / 16.00	.650 / 16.51	1.122 / 28.50	.410 / 10.41	9
48223-000LF	.630 / 16.00	.650 / 16.51	1.122 / 28.50	.410 / 10.41	9
48224-000	.390 / 9.91	.410 / 10.41	1.122 / 28.50	.650 / 16.51	9
48224-000LF	.390 / 9.91	.410 / 10.41	1.122 / 28.50	.650 / 16.51	9
48225-000	.308 / 7.82	.328 / 8.33	.450 / 11.43	.060 / 1.52	9
48225-000LF	.308 / 7.82	.328 / 8.33	.450 / 11.43	.060 / 1.52	9

PRODUCT NUMBER NOTE 20	CONTACT AREA DIM A	DIM H	OVERALL LENGTH DIM L	DIM R	PLATING CODE
48226-000	.400 / 10.16	.420 / 10.67	.892 / 22.66	.410 / 10.41	9
48226-000LF	.400 / 10.16	.420 / 10.67	.892 / 22.66	.410 / 10.41	9
48227-000	.630 / 16.00	.650 / 16.51	.770 / 19.56	.058 / 1.47	9
48227-000LF	.630 / 16.00	.650 / 16.51	.770 / 19.56	.058 / 1.47	9
48228-000	~~.630 / 16.00~~	~~.650 / 16.51~~	~~1.122 / 28.50~~	~~.410 / 10.41~~	OBSOLETE
48228-000LF	.630 / 16.00	.650 / 16.51	1.122 / 28.50	.410 / 10.41	4
48265-000	.630 / 16.00	.650 / 16.51	1.122 / 28.50	.410 / 10.41	3
48265-000LF	.630 / 16.00	.650 / 16.51	1.122 / 28.50	.410 / 10.41	3
48267-000	~~.280 / 7.11~~	~~.300 / 7.62~~	~~.552 / 14.02~~	~~.190 / 4.83~~	OBSOLETE
48267-000LF	.280 / 7.11	.300 / 7.62	.552 / 14.02	.190 / 4.83	4
48277-000	.500 / 12.70	.520 / 13.21	.640 / 16.26	.058 / 1.47	1
48277-000LF	.500 / 12.70	.520 / 13.21	.640 / 16.26	.058 / 1.47	1
48278-000	.573 / 14.55	.593 / 15.06	.895 / 22.73	.240 / 6.10	9
48278-000LF	.573 / 14.55	.593 / 15.06	.895 / 22.73	.240 / 6.10	9
48305-000	.485 / 12.32	.505 / 12.83	.960 / 24.38	.393 / 9.98	1
48305-000LF	.485 / 12.32	.505 / 12.83	.960 / 24.38	.393 / 9.98	1

mat'l. code	SEE NOTE 1	surface ASME Y14.5	tolerance ASME Y14.5
ltr / ecn no / dr / date	ER	tolerances unless otherwise specified	
angles	0°±2°	linear	.XX±.01/.X±.3 / .XXX±.005/.XX±.13 / .XXXX±.0020/.XXX±.051
dr	T. BREWBAKER	2008-08-29	
engr	T. BREWBAKER	2008-08-29	
chr	T. BREWBAKER	2008-08-29	
appd	T. BREWBAKER	2008-08-29	
projection	INCH/MM	scale 1:1	
product family	PIN PRODUCTS		
title	BERGPOST® .200"[5.08]cc WITH RETENTION NICKS		
dwg no	47310	sheet 6 of 6	size A4
type	CUSTOMER Drawing		
sheet index	revision sheet		

form: A4mmXLc

PDM: Rev:ER STATUS Released Printed: Jul 14, 2012

X-ON Electronics

Largest Supplier of Electrical and Electronic Components

Click to view similar products for Terminals ***category:***

Click to view products by Amphenol ***manufacturer:***

Other Similar products are found below :

HT-13-10 71M-250-32-NB 01-2065-1-0216 00581P0075 M10-10RX M10BCK 60205-1 604200-1 60598-1-CUT-TAPE 60617-1-C 60873-1 M14-516R/SK M14-6RSX M18-10FLX M18-8FBX M18-8R/LX M18BCK 61314-6-C 61-S 61-SN-A 62-NBM-A 63-S 640179-1 640917-2-CUT-TAPE 6501550002 66107-2-C 696683-1 696834-1 696861-1 696931-1 696999-1 M8-516RK M86700006 MA250DMFMX-A 701-2007 701-2307 701-7761-03 70F-110-32-PB 718-N-A 71M-187-20-NBL 71M-250-32-NBL 72F-187-20-NBL 72M-250-32-NBL 7310 73F-250-32 73F-250-32-NBL 73F-250-32-NL F14-10C F-1M 751-250