PRODUCT NUMBER

XXXXX-XYYHTLF

- LEAD FREE OPTION (SEE NOTES 1)
- PACKAGING OPTIONS (SEE NOTE 1)
- HIGH TEMPERATURE PLASTIC (SEE NOTE 1)
- NO OF POSITIONS (SEE NOTE 1)
- PIN PLATING (SEE SHEET 2
- BASE PART NO.

68000-X XX-XXX XXX LF

- TAIL LENGTH (EXAMPLE BELOW) 3.0mm=030 12.8mm=128 (SEE NOTE 15 & 16)
- MATTING LENGTH (EXAMPLE BELOW) 5.0mm=050 25.5mm=255 (SEE NOTE 15 & 16)
- TOTAL NUMBER OF POSITION FROM 1 THRU 36 POS. (SEE NOTE 1)
- PIN PLATING (SEE NOTE 13) 1=0.76µm Au 4= PURE TIN 8=0.36µm Au
- BASE PART NO.

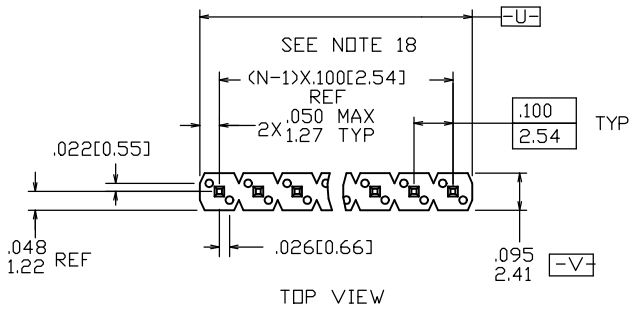

TOP VIEW

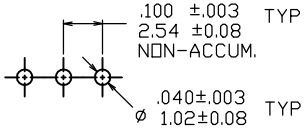

RECOMMENDED HOLE PATTERN

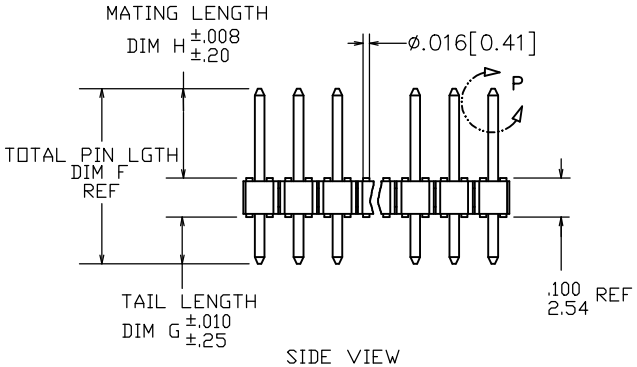

SIDE VIEW

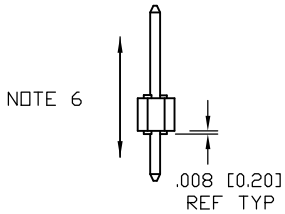

END VIEW

⌖	ø.020/.51 Ⓜ	U Ⓜ	V Ⓢ

NOTE 4

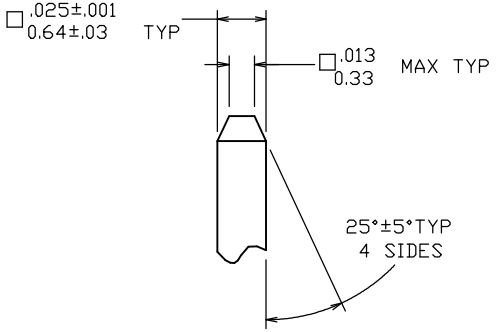

DETAIL P
TYP BOTH ENDS

USER DIRECTION

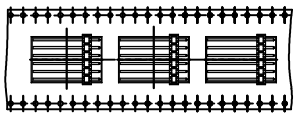

PACKAGE:

ONLY FOR 68000-406160035ALF

mat'l. code NOTES 2 & 3				surface ISO 1302 √		tolerance ISO 406 ISO 1101		projection	product family BERGSTIK
ltr	ecn no	dr	date	tolerances unless otherwise specified					title BERGSTIK® II HEADER .100/2.54cc SR STRAIGHT
CY	ELX-N-011895	JZ	2012-06-12	angles	linear	.XX±01/.X±.3		INCH/MM	
DA	ELX-N-16105	ZK	2013-10-22			.XXX±0.006/.XX±.15			
DB	ELX-N-17329	ZK	2014-03-27	0°±2°		.XXXX±0.0002/.XXX±.005		scale 1:1	
DC	ELX-N-28578	MZ	2017-11-23	dr	T.BREWBAKER	01/05/95			dwg no 68000 — sheet 1 of 8 — size A3
				engr	T.HANNA	01/05/95		Amphenol FCi	
				chr	J.MURPHY	01/05/95			
				appd	T.HANNA	01/05/95			type Product Customer Drawing

sheet index	revision	DC	DC	DC	DC	DC	DC	DC	DC	DC
	sheet	1	2	3	4	5	6	7	8	9

© 2016 AFCI

PIN PLATING CODES:	
XXXXX-1YY	30u"/0.76u MIN (SEE NOTE 13) OVER 50u"/1.27u MIN Ni
XXXXX-2YY	15u"/0.38u MIN (SEE NOTE 13) OVER 50u"/1.27u MIN Ni
XXXXX-3YY	50u"/1.27u MIN (SEE NOTE 13) OVER 50u"/1.27u MIN Ni
XXXXX-4YY	100u"/2.54u MIN Sn OVER 50u"/1.27u MIN Ni (SEE NOTE 14)
XXXXX-4YYHLF	
XXXXX-5YY	15u"/0.38u MIN (SEE NOTE 13) OVER 50u"/1.27u MIN Ni
XXXXX-6YY	30u"/0.76u MIN (SEE NOTE 13) OVER 50u"/1.27u MIN Ni
XXXXX-7YY	30u"/0.76u MIN (SEE NOTE 13) OVER 50u"/1.27u MIN Ni
XXXXX-8YY	15u"/0.38u MIN (SEE NOTE 13) OVER 50u"/1.27u MIN Ni
XXXXX-9YY	15u"/0.38u MIN (SEE NOTE 13) OVER 50u"/1.27u MIN Ni
XXXXX-0YY	30u"/0.76u MIN (SEE NOTE 13) OVER 50u"/1.27u MIN Ni

NOTES

1. PART NUMBER OPTIONS:

PIN PLATING CODES (SEE ABOVE)

HIGH TEMP. MATERIAL:

PART NUMBERS WITH AND WITHOUT "H" WILL BE SUPPLIED WITH HIGH TEMPERATURE PLASTIC

NUMBER OF POSITIONS :

ANY NUMBER OF POSITIONS FROM 1 THRU 36.
-X00H INDICATES BERGSTRIP™ PRODUCT. SEE PAGE 3 FOR SPECIAL GEOMETRY OF THIS CONTINUOUS STRIP PRODUCT.
AUTOMATED REELS WILL CONTAIN 36,000 PINS.
SEE SPECIFIC PART NUMBERS FOR AVAILABILITY.

PACKAGING :

NO INDICATOR IS STANDARD PACKAGING IN POLY BAGS.

EIGHT DIGIT PART NUMBERS FOLLOWED BY A "T" ARE PACKAGED IN TUBES. SEE SPECIFIC PART NUMBERS FOR AVAILABILITY.

EIGHT DIGIT PART NUMBERS FOLLOWED BY A "C" ARE PACKAGED IN TUBES WITH PICKUP CAP APPLIED. (NOT TOOLED)

BERGSTRIP™ PART NUMBERS FOLLOWED BY A "B" ARE BULK PRICED.

EIGHT DIGIT PART NUMBERS FOLLOWED BY A "A" ARE PACKAGED IN TAPE AND REEL WITH PICKUP CAP APPLIED.

LEAD FREE :

ADD "LF" SUFFIX AT THE END OF PART NUMBER FOR LEAD FREE

2. BODY MATERIAL :

BERGSTIK: MANUFACTURER'S OPTION OF NYLON, PCT GLASS FIBER REINFORCED, OR LCP MINERAL FILLED FLAME RETARDENT PER UL-94V-0.
COLOR : BLACK
BERGSTRIP™ : PRODUCED WITH HIGH TEMPERATURE LCP THERMOPLASTIC, FLAME RETARDENT PER UL-94V-0.
COLOR : BLACK

PART NUMBERS WITH AND WITHOUT "H" SUFFIX WILL WITHSTAND EXPOSURE TO 260°C PEAK TEMPERATURE FOR 20 SECONDS IN WAVE SOLDER, INFRA-RED OR VAPOR PHASE SOLDER PROCESS.

3. PIN MATERIAL : PHOS-BRONZE.

4. MEASURED WITH PART IN RESTRAINED CONDITION.

5. TWO SIDES OF PIN TIPS NOT PLATED. TYPICAL BOTH ENDS.

6. 2LBS/0.9KG MIN PIN RETENTION IN EITHER DIRECTION.

7. PIN CANNOT PROTRUDE PAST EDGE OF HOUSING. MUST BE .005±.005/.13±.13 FROM END OF HOUSING HOLE.

8. MILITARY BERGSTIK HEADER
P/N XXXXX-XYY-MIL.
NOT AVAILABLE.

9. ±.010/0.25 TOL APPLIES TO ALL "G" TAILS EXCEPT INDICATED PARTS ON TABLE WHERE +.010/0.25 -.000/0.00 APPLIES.

10. INDICATED PART NUMBERS ARE PRODUCED AND SOLD IN THE TAIWAN/SINGAPORE AREAS. THESE ARE NOT AVAILABLE IN BERGSTRIP™ CONTINUOUS STRIP.

11. NOTCH CONFIGURATION WILL VARY PER VENDOR'S DISCRETION.

12. THESE PRODUCTS MEETS EUROPEAN UNION DIRECTIVES AND OTHER COUNTRY REGULATION AS DESCRIBED IN GS-22-008.

13. PLATING OPTIONS:
PERFORMANCE PLATING WILL BE EITHER GOLD OR GXT ON POST OR TAIL, OPTIONALLY (78~295u''/2~7.5u) TIN ON TAIL.

14. "THIS PRODUCT HAS 100% TIN PLATING IN THE INTERFACE AND HAS NOT BEEN TESTED FOR WHISKER GROWTH IN ALL INTERCONNECT ENVIRONMENTS."

15. THE OAL DON'T EXCEED 34.5mm

16. INCREMENTS BY 0.1mm IN LENGTHS ONLY

17. FOR SPECIAL PACKAGING REQUEST PLEASE CONTACT PRODUCT MANAGER FOR AVAILABILITY

18. TO DETERMINE DIMENSIONS:
N=NUMBER OF POSITION PER ROW
EXAMPLE: 10 POS. N X .100/2.54

19. 68000-406160035ALF IS SPECIAL PART NUMBER, IT IS 6PIN, MATING LENGTH IS 16mm. TAIL LENGTH IS 3.5mm. AND PACKAGE IS TAPE AND REEL AND NO CAP.

www.fciconnect.com			surface ISO 1302	tolerance std ISO 406 ISO 1101		projection	INCH/MM
			TOLERANCES UNLESS OTHERWISE SPECIFIED				
Dr	T.BREWBAKER	01/05/95	ANGULAR	LINEAR	0.X ±0.3	size A4	Scale 1.000
Eng	T.HANNA	01/05/95			0.XX ±0.15		
Chr	J.MURPHY	01/05/95	0° ±2°		0.XXX ±0.05	ECN	
Appr	T.HANNA	01/05/95	Product family	BERGSTIK		Spec ref	
title	BERGSTIK® II HEADER .100/2.54cc SR STRAIGHT				dwg no	68000	Rev. DC
catalog no					CUSTOMER		sheet 2 of 8

Copyright FCI.

REV F - 2006-04-17

BERGSTRIP™ HEADER

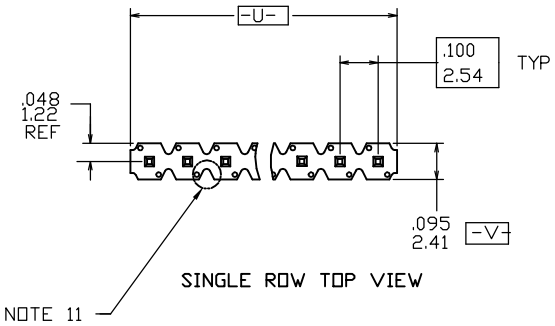

SINGLE ROW TOP VIEW

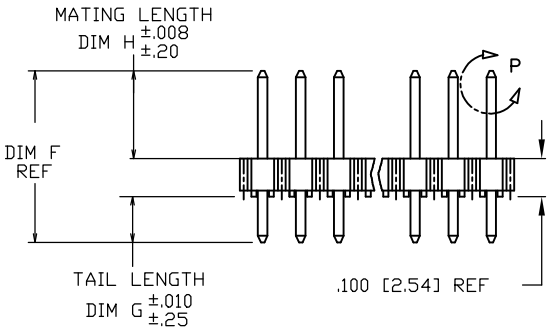

SINGLE ROW SIDE VIEW

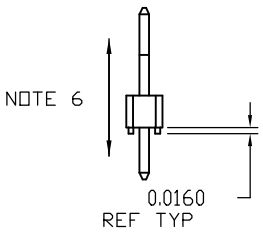

SINGLE ROW END VIEW

REEL PACKING DIMENSIONS

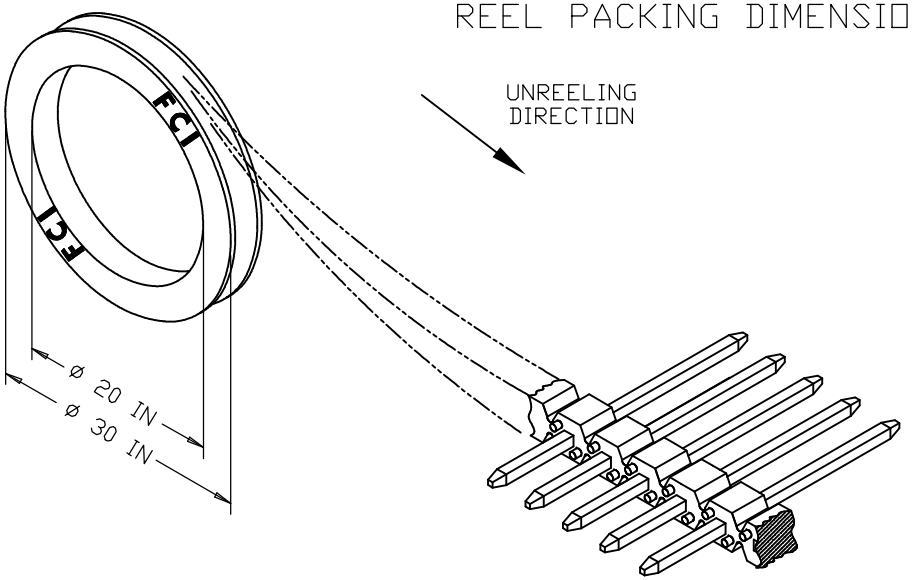

www.fciconnect.com			surface ISO 1302		tolerance std ISO 406 ISO 1101		projection	INCH/MM
			TOLERANCES UNLESS OTHERWISE SPECIFIED					
Dr	T.BREWBAKER	01/05/95	ANGULAR	LINEAR	0.X	±0.3	size A4	Scale 1.000
Eng	T.HANNA	01/05/95			0.XX	±0.15		
Chr	J.MURPHY	01/05/95	0° ±2°		0.XXX	±0.05	ECN	
Appr	T.HANNA	01/05/95	Product family		BERGSTIK		Spec ref	
title	BERGSTIK® II HEADER .100/2.54cc SR STRAIGHT				dwg no	68000		Rev. DC
catalog no					CUSTOMER		sheet 3 of 8	

Copyright FCI.

REV F - 2006-04-17

PRODUCT NUMBER	TOTAL PIN LGTH		TAIL LENGTH		MATING LENGTH				BERGSTRIP™ AVAILABLE	LF OPTION
	DIM F	DIM F	DIM G	DIM G	DIM H	DIM H				
	ENGLISH	METRIC	ENGLISH	METRIC	ENGLISH	METRIC	PACKAGING	NOTES		
~~55492-XYYH~~	~~0.315~~	~~8.00~~	~~0.095~~	~~2.41~~	~~0.120~~	~~3.05~~	~~POLY BAGS~~	~~–~~	~~NO~~	OB
~~60017-XYYH~~	~~0.620~~	~~15.75~~	~~0.210~~	~~5.33~~	~~0.310~~	~~7.87~~	~~POLY BAGS~~	~~–~~	~~NO~~	OB
~~60018-XYYH~~	~~0.660~~	~~16.76~~	~~0.250~~	~~6.35~~	~~0.310~~	~~7.87~~	~~POLY BAGS~~	~~–~~	~~NO~~	OB
~~63334-XYYH~~	~~0.435~~	~~11.05~~	~~0.095~~	~~2.41~~	~~0.240~~	~~6.10~~	~~POLY BAGS~~	~~–~~	~~NO~~	OB
68000-XYY	0.425	10.80	0.095	2.41	0.230	5.84	POLY BAGS	–	YES	NOTE 1,12
68001-XYY	0.450	11.43	0.120	3.05	0.230	5.84	POLY BAGS/TUBES	–	YES	
68002-XYY	0.480	12.19	0.150	3.81	0.230	5.84	POLY BAGS	–	YES	
~~68003-XYY~~	~~0.525~~	~~13.34~~	~~0.195~~	~~4.95~~	~~0.230~~	~~5.84~~	~~POLY BAGS~~	~~–~~	~~NO~~	OB
68004-XYY	0.525	13.34	0.107	2.72	0.318	8.08	POLY BAGS	–	YES	
68024-XYY	0.568	14.43	0.150	3.81	0.318	8.08	POLY BAGS	–	YES	
68031-XYY	0.513	13.03	0.183	4.65	0.230	5.84	POLY BAGS	–	NO	
~~68032-XYY~~	~~0.543~~	~~13.79~~	~~0.213~~	~~5.41~~	~~0.230~~	~~5.84~~	~~POLY BAGS~~	~~–~~	~~NO~~	OB
68033-XYY	0.708	17.98	0.473	12.01	0.135	3.43	POLY BAGS	–	NO	
68415-XYY	0.615	15.62	0.115	2.92	0.400	10.16	POLY BAGS	–	NO	
68416-XYY	0.813	20.65	0.483	12.27	0.230	5.84	POLY BAGS	–	NO	
68418-XYY	0.730	18.54	0.400	10.16	0.230	5.84	POLY BAGS	–	NO	
68422-XYY	0.631	16.03	0.213	5.41	0.318	8.08	POLY BAGS	–	NO	
~~68443-XYY~~	~~0.755~~	~~19.18~~	~~0.425~~	~~10.80~~	~~0.230~~	~~5.84~~	~~POLY BAGS~~	~~–~~	~~NO~~	OB
~~68456-XYY~~	~~0.825~~	~~20.96~~	~~0.115~~	~~2.92~~	~~0.610~~	~~15.49~~	~~POLY BAGS~~	~~–~~	~~NO~~	OB
68457-XYY	0.548	13.92	0.130	3.30	0.318	8.08	POLY BAGS	–	NO	
~~68465-XYY~~	~~0.925~~	~~23.50~~	~~0.595~~	~~15.11~~	~~0.230~~	~~5.84~~	~~POLY BAGS~~	~~–~~	~~NO~~	OB
68466-XYY	0.925	23.50	0.128	3.25	0.697	17.70	POLY BAGS	–	NO	
~~68472-XYY~~	~~0.913~~	~~23.19~~	~~0.413~~	~~10.49~~	~~0.400~~	~~10.16~~	~~POLY BAGS~~	~~–~~	~~NO~~	OB
~~68479-XYY~~	~~0.718~~	~~18.24~~	~~0.388~~	~~9.86~~	~~0.230~~	~~5.84~~	~~POLY BAGS~~	~~–~~	~~NO~~	OB
~~68483-XYY~~	~~0.835~~	~~21.21~~	~~0.417~~	~~10.59~~	~~0.318~~	~~8.08~~	~~POLY BAGS~~	~~–~~	~~NO~~	OB
~~68487-XYY~~	~~0.705~~	~~17.91~~	~~0.110~~	~~2.79~~	~~0.495~~	~~12.57~~	~~POLY BAGS~~	~~–~~	~~NO~~	OB
~~68489-XYY~~	~~1.095~~	~~27.81~~	~~0.765~~	~~19.43~~	~~0.230~~	~~5.84~~	~~POLY BAGS~~	~~–~~	~~NO~~	OB
~~68490-XYY~~	~~1.025~~	~~26.04~~	~~0.695~~	~~17.65~~	~~0.230~~	~~5.84~~	~~POLY BAGS~~	~~–~~	~~NO~~	OB
68497-XYY	0.612	15.54	0.085	2.16	0.427	10.85	POLY BAGS	–	NO	
68603-XYY	0.555	14.10	0.120	3.05	0.335	8.51	POLY BAGS	–	NO	
68604-XYY	0.600	15.24	0.120	3.05	0.380	9.65	POLY BAGS	–	NO	NOTE 1,12

Copyright FCI.

www.fciconnect.com			surface ISO 1302	tolerance std ISO 406 ISO 1101		projection	INCH/MM	
			TOLERANCES UNLESS OTHERWISE SPECIFIED					
Dr	T.BREWBAKER	01/05/95	ANGULAR	LINEAR	0.X	±0.3	size A4	Scale 1.000
Eng	T.HANNA	01/05/95			0.XX	±0.15		
Chr	J.MURPHY	01/05/95	0° ±2°		0.XXX	±0.05	ECN	
Appr	T.HANNA	01/05/95	Product family	BERGSTIK			Spec ref	
title	BERGSTIK® II HEADER .100/2.54cc SR STRAIGHT				dwg no	68000		Rev. DC
catalog no					CUSTOMER		sheet 4 of 8	

REV F - 2006-04-17

PRODUCT NUMBER	TOTAL PIN LGTH		TAIL LENGTH		MATING LENGTH				BERGSTRIP™	LF
	DIM F	DIM F	DIM G	DIM G	DIM H	DIM H			AVAILABLE	OPTION
	ENGLISH	METRIC	ENGLISH	METRIC	ENGLISH	METRIC	PACKAGING	NOTES		
~~68629-XYY~~	~~0.621~~	~~15.77~~	~~0.203~~	~~5.16~~	~~0.318~~	~~8.08~~	~~POLY BAGS~~	~~-~~	~~NO~~	OB
~~68630-XYY~~	~~0.603~~	~~15.32~~	~~0.273~~	~~6.93~~	~~0.230~~	~~5.84~~	~~POLY BAGS~~	~~-~~	~~NO~~	OB
~~68631-XYY~~	~~0.703~~	~~17.86~~	~~0.203~~	~~5.16~~	~~0.400~~	~~10.16~~	~~POLY BAGS~~	~~-~~	~~NO~~	OB
~~68632-XYY~~	~~0.743~~	~~18.87~~	~~0.413~~	~~10.49~~	~~0.230~~	~~5.84~~	~~POLY BAGS~~	~~-~~	~~NO~~	OB
68633-XYY	0.643	16.33	0.225	5.72	0.318	8.08	POLY BAGS	-	NO	NOTE 1,12
~~68634-XYY~~	~~1.013~~	~~25.73~~	~~0.683~~	~~17.35~~	~~0.230~~	~~5.84~~	~~POLY BAGS~~	~~-~~	~~NO~~	OB
~~68642-XYY~~	~~0.913~~	~~23.19~~	~~0.583~~	~~14.81~~	~~0.230~~	~~5.84~~	~~POLY BAGS~~	~~-~~	~~NO~~	OB
~~68652-XYY~~	~~1.470~~	~~37.34~~	~~0.670~~	~~17.02~~	~~0.700~~	~~17.78~~	~~POLY BAGS~~	~~-~~	~~NO~~	OB
68653-XYY	0.735	18.67	0.095	2.41	0.540	13.72	POLY BAGS	-	NO	
~~68654-XYY~~	~~1.050~~	~~26.67~~	~~0.670~~	~~17.02~~	~~0.280~~	~~7.11~~	~~POLY BAGS~~	~~-~~	~~NO~~	OB
68655-XYY	0.708	17.98	0.290	7.37	0.318	8.08	POLY BAGS	-	NO	
~~68656-XYY~~	~~1.113~~	~~28.27~~	~~0.613~~	~~15.57~~	~~0.400~~	~~10.16~~	~~POLY BAGS~~	~~-~~	~~NO~~	OB
68657-XYY	0.588	14.94	0.368	9.35	0.120	3.05	POLY BAGS	-	NO	
~~68658-XYY~~	~~0.820~~	~~20.83~~	~~0.130~~	~~3.30~~	~~0.590~~	~~14.99~~	~~POLY BAGS~~	~~-~~	~~NO~~	OB
~~68659-XYY~~	~~0.608~~	~~15.44~~	~~0.398~~	~~10.11~~	~~0.110~~	~~2.79~~	~~POLY BAGS~~	~~-~~	~~NO~~	OB
~~68686-XYY~~	~~1.016~~	~~25.81~~	~~0.458~~	~~11.63~~	~~0.458~~	~~11.63~~	~~POLY BAGS~~	~~-~~	~~NO~~	OB
~~68689-XYY~~	~~0.913~~	~~23.19~~	~~0.213~~	~~5.41~~	~~0.600~~	~~15.24~~	~~POLY BAGS~~	~~-~~	~~NO~~	OB
68705-XYY	0.395	10.03	0.095	2.41	0.200	5.08	POLY BAGS	-	NO	
68717-XYY	0.615	15.62	0.285	7.24	0.230	5.84	POLY BAGS	-	NO	
~~68730-XYY~~	~~0.555~~	~~14.10~~	~~0.225~~	~~5.72~~	~~0.230~~	~~5.84~~	~~POLY BAGS~~	~~-~~	~~NO~~	OB
~~68731-XYY~~	~~0.880~~	~~22.35~~	~~0.440~~	~~11.18~~	~~0.340~~	~~8.64~~	~~POLY BAGS~~	~~-~~	~~NO~~	OB
~~68735-XYY~~	~~1.016~~	~~25.81~~	~~0.520~~	~~13.21~~	~~0.396~~	~~10.06~~	~~POLY BAGS~~	~~-~~	~~NO~~	OB
~~68755-XYY~~	~~1.166~~	~~29.62~~	~~0.533~~	~~13.54~~	~~0.533~~	~~13.54~~	~~POLY BAGS~~	~~-~~	~~NO~~	OB
~~68760-XYY~~	~~0.803~~	~~20.40~~	~~0.353~~	~~8.97~~	~~0.350~~	~~8.89~~	~~POLY BAGS~~	~~-~~	~~NO~~	OB
~~68762-XYY~~	~~0.588~~	~~14.94~~	~~0.213~~	~~5.41~~	~~0.275~~	~~6.99~~	~~POLY BAGS~~	~~-~~	~~NO~~	OB
68771-XYY	0.470	11.94	0.100	2.54	0.270	6.86	POLY BAGS	-	NO	NOTE 1,12
~~68781-XYY~~	~~0.691~~	~~17.55~~	~~0.273~~	~~6.93~~	~~0.318~~	~~8.08~~	~~POLY BAGS~~	~~-~~	~~NO~~	OB

Copyright FCI.

www.fciconnect.com			surface ISO 1302		tolerance std ISO 406 ISO 1101		projection	INCH/MM
			TOLERANCES UNLESS OTHERWISE SPECIFIED					
Dr	T.BREWBAKER	01/05/95	ANGULAR	LINEAR	0.X	±0.3	size A4	Scale 1.000
Eng	T.HANNA	01/05/95			0.XX	±0.15		
Chr	J.MURPHY	01/05/95	0° ±2°		0.XXX	±0.05	ECN	
Appr	T.HANNA	01/05/95	Product family		BERGSTIK		Spec ref	
title	BERGSTIK® II HEADER .100/2.54cc SR STRAIGHT				dwg no	68000		Rev. DC
catalog no					CUSTOMER		sheet 5 of 8	

REV F - 2006-04-17

PRODUCT NUMBER	TOTAL PIN LGTH		TAIL LENGTH		MATING LENGTH				BERGSTRIP™	LF
	DIM F	DIM F	DIM G	DIM G	DIM H	DIM H			AVAILABLE	OPTION
	ENGLISH	METRIC	ENGLISH	METRIC	ENGLISH	METRIC	PACKAGING	NOTES		
~~68795-XYY~~	~~0.500~~	~~12.70~~	~~0.062~~	~~1.57~~	~~0.338~~	~~8.59~~	~~POLY BAGS~~	~~-~~	~~NO~~	OB
~~68796-XYY~~	~~0.633~~	~~16.08~~	~~0.423~~	~~10.74~~	~~0.110~~	~~2.79~~	~~POLY BAGS~~	~~-~~	~~NO~~	OB
68797-XYY	0.413	10.49	0.213	5.41	0.100	2.54	POLY BAGS	-	NO	NOTE 1,12
~~69148-XYY~~	~~0.442~~	~~11.43~~	~~0.000~~	~~0.00~~	~~0.350~~	~~8.89~~	~~POLY BAGS~~	~~-~~	~~NO~~	OB
~~69152-XYY~~	~~0.720~~	~~18.29~~	~~0.120~~	~~3.05~~	~~0.500~~	~~12.70~~	~~POLY BAGS/TUBES~~	~~-~~	~~NO~~	OB
69173-XYY	0.530	13.46	0.135	3.43	0.295	7.49	POLY BAGS	-	NO	
69188-XYY	0.751	19.08	0.333	8.46	0.318	8.08	POLY BAGS	-	NO	
~~69751-XYY~~	~~0.440~~	~~11.18~~	~~0.170~~	~~4.32~~	~~0.170~~	~~4.32~~	~~POLY BAGS~~	~~NOTE 10~~	~~NO~~	OB
~~71417-XYY~~	~~0.664~~	~~16.87~~	~~0.115~~	~~2.92~~	~~0.449~~	~~11.40~~	~~POLY BAGS~~	~~NOTE 10~~	~~NO~~	OB
~~72260-XYYH~~	~~0.930~~	~~23.62~~	~~0.090~~	~~2.29~~	~~0.740~~	~~18.80~~	~~POLY BAGS~~	~~-~~	~~NO~~	OB
~~72323-XYYH~~	~~1.200~~	~~30.48~~	~~0.100~~	~~2.54~~	~~1.000~~	~~25.40~~	~~POLY BAGS~~	~~-~~	~~NO~~	OB
~~72457-XYYH~~	~~1.100~~	~~27.94~~	~~0.090~~	~~2.29~~	~~0.910~~	~~23.11~~	~~POLY BAGS~~	~~-~~	~~NO~~	OB
73698-XYYH	1.100	27.94	0.120	3.05	0.880	22.35	POLY BAGS	-	NO	
~~74464-XYYH~~	~~1.028~~	~~26.11~~	~~0.610~~	~~15.49~~	~~0.318~~	~~8.08~~	~~POLY BAGS~~	~~-~~	~~NO~~	OB
~~78240-XYY~~	~~0.663~~	~~16.84~~	~~0.333~~	~~8.46~~	~~0.230~~	~~5.84~~	~~POLY BAGS~~	~~-~~	~~NO~~	OB
~~78287-XYY~~	~~0.678~~	~~17.22~~	~~0.120~~	~~3.05~~	~~0.458~~	~~11.63~~	~~POLY BAGS~~	~~-~~	~~NO~~	OB
78290-XYY	1.250	31.75	0.500	12.70	0.650	16.51	POLY BAGS	-	NO	
78511-XYY	0.538	13.67	0.120	3.05	0.318	8.08	POLY BAGS/TUBES	-	YES	
78595-XYY		NOT AVAILABLE						-	-	
78931-XYY		NOT AVAILABLE						-	-	
78958-XYY		NOT AVAILABLE						-	-	
78959-XYY		NOT AVAILABLE						-	-	
78977-XYY		NOT AVAILABLE						-	-	
78998-XYY	0.430	10.92	0.155	3.94	0.175	4.45	POLY BAGS	-	NO	
78999-XYY		NOT AVAILABLE						-	-	NOTE 1,12
~~79428-XYY~~	~~0.695~~	~~17.65~~	~~0.120~~	~~3.05~~	~~0.475~~	~~12.07~~	~~POLY BAGS~~	~~-~~	~~NO~~	OB
~~79849-XYY~~	~~0.620~~	~~15.75~~	~~0.120~~	~~3.05~~	~~0.400~~	~~10.16~~	~~POLY BAGS~~	~~-~~	~~NO~~	OB

Copyright FCI.

www.fciconnect.com

surface ISO 1302 √ | tolerance std ISO 406 ISO 1101 | projection | INCH/MM

TOLERANCES UNLESS OTHERWISE SPECIFIED

Dr	T.BREWBAKER	01/05/95	ANGULAR	LINEAR	0.X	±0.3	size A4	Scale 1.000
Eng	T.HANNA	01/05/95			0.XX	±0.15		
Chr	J.MURPHY	01/05/95	0° ±2°		0.XXX	±0.05	ECN	
Appr	T.HANNA	01/05/95	Product family		BERGSTIK		Spec ref	

title: BERGSTIK® II HEADER .100/2.54cc SR STRAIGHT

dwg no: 68000 | Rev. DC

catalog no | CUSTOMER | sheet 6 of 8

REV F - 2006-04-17

PRODUCT NUMBER	TOTAL PIN LGTH		TAIL LENGTH		MATING LENGTH				BERGSTRIP™	LF OPTION
	DIM F	DIM F	DIM G	DIM G	DIM H	DIM H			AVAILABLE	
	ENGLISH	METRIC	ENGLISH	METRIC	ENGLISH	METRIC	PACKAGING	NOTES		
~~84918-XYYH~~	~~0.340~~	~~8.64~~	~~0.120~~	~~3.05~~	~~0.120~~	~~3.05~~	~~POLY BAGS~~	~~-~~	~~YES~~	OB
~~84921-XYYH~~	~~0.370~~	~~9.40~~	~~0.150~~	~~3.81~~	~~0.120~~	~~3.05~~	~~POLY BAGS~~	~~-~~	~~YES~~	OB
~~86506-XYY~~	~~0.440~~	~~11.18~~	~~0.120~~	~~3.05~~	~~0.220~~	~~5.59~~	~~POLY BAGS~~	~~-~~	~~YES~~	OB
~~86579-XYY~~	~~0.450~~	~~11.43~~	~~0.120~~	~~3.05~~	~~0.230~~	~~5.84~~	~~POLY BAGS~~	~~NOTE 9~~	~~NO~~	OB
86634-XYY	NOT AVAILABLE							-	-	NOTE 1,12
86635-XYY	NOT AVAILABLE							-	-	
86636-XYY	NOT AVAILABLE							-	-	
86637-XYY	NOT AVAILABLE							-	-	
86638-XYY	NOT AVAILABLE							-	-	
~~86793-XYY~~	~~0.900~~	~~22.86~~	~~0.100~~	~~2.54~~	~~0.700~~	~~17.78~~	~~POLY BAGS~~	~~NOTE 10~~	~~NO~~	OB
~~86899-XYY~~	~~1.020~~	~~25.91~~	~~0.120~~	~~3.05~~	~~0.800~~	~~20.32~~	~~POLY BAGS~~	~~-~~	~~NO~~	OB
87185-XYY	1.238	31.45	0.095	2.41	1.043	26.49	POLY BAGS	NOTE 10	NO	
~~87204-XYY~~	~~0.895~~	~~22.73~~	~~0.120~~	~~3.05~~	~~0.675~~	~~17.15~~	~~POLY BAGS~~	~~-~~	~~NO~~	OB
~~87241-XYY~~	~~1.000~~	~~25.40~~	~~0.120~~	~~3.05~~	~~0.780~~	~~19.81~~	~~POLY BAGS~~	~~-~~	~~NO~~	OB
~~87502-XYYH~~	~~1.130~~	~~28.70~~	~~0.110~~	~~2.79~~	~~0.920~~	~~23.37~~	~~POLY BAGS~~	~~-~~	~~NO~~	OB
87827-XYY	0.380	9.65	0.120	3.05	0.160	4.06	POLY BAGS	-	NO	
87916-XYY	1.058	26.87	0.128	3.25	0.830	21.08	POLY BAGS	-	NO	NOTE 1,12
~~88005-XYY~~	~~0.536~~	~~13.61~~	~~0.095~~	~~2.41~~	~~0.341~~	~~8.66~~	~~POLY BAGS~~	~~NOTE 10~~	~~NO~~	OB
~~88706-XYY~~	~~0.900~~	~~22.86~~	~~0.100~~	~~2.54~~	~~0.700~~	~~17.78~~	~~POLY BAGS~~	~~-~~	~~NO~~	OB
~~89232-XYY~~	~~0.325~~	~~8.26~~	~~0.000~~	~~0.00~~	~~0.230~~	~~5.84~~	~~POLY BAGS~~	~~NOTE 7~~	~~NO~~	OB

Copyright FCI.

www.fciconnect.com			surface ISO 1302	tolerance std ISO 406 ISO 1101		projection	INCH/MM
			TOLERANCES UNLESS OTHERWISE SPECIFIED				
Dr	T.BREWBAKER	01/05/95	ANGULAR	LINEAR	0.X ±0.3	size A4	Scale 1.000
Eng	T.HANNA	01/05/95			0.XX ±0.15		
Chr	J.MURPHY	01/05/95	0° ±2°		0.XXX ±0.05	ECN	
Appr	T.HANNA	01/05/95	Product family	BERGSTIK		Spec ref	
title	BERGSTIK® II HEADER .100/2.54cc SR STRAIGHT				dwg no 68000		Rev. DC
catalog no					CUSTOMER		sheet 7 of 8

REV F - 2006-04-17

PRODUCT NUMBER	TOTAL PIN LGTH		TAIL LENGTH		MATING LENGTH				BERGSTRIP™	LF
	DIM F	DIM F	DIM G	DIM G	DIM H	DIM H			AVAILABLE	OPTION
	ENGLISH	METRIC	ENGLISH	METRIC	ENGLISH	METRIC	PACKAGING	NOTES		
~~90522-XYY~~	~~0.668~~	~~16.97~~	~~0.135~~	~~3.43~~	~~0.433~~	~~11.00~~	~~POLY BAGS~~	~~NOTE 10~~	~~NO~~	OB
~~90547-XYY~~	~~0.508~~	~~12.90~~	~~0.095~~	~~2.41~~	~~0.313~~	~~7.95~~	~~POLY BAGS~~	~~NOTE 10~~	~~NO~~	OB
90719-XYY	0.384	9.75	0.106	2.69	0.178	4.52	POLY BAGS	–	NO	
~~90726-XYY~~	~~0.440~~	~~11.18~~	~~0.110~~	~~2.79~~	~~0.230~~	~~5.84~~	~~POLY BAGS~~	~~–~~	~~YES~~	OB
91276-XYY	1.225	31.12	0.225	5.72	0.900	22.86	POLY BAGS	–	NO	NOTE 1,12
~~92020-XYY~~	~~0.372~~	~~9.45~~	~~0.094~~	~~2.39~~	~~0.178~~	~~4.52~~	~~POLY BAGS~~	~~–~~	~~NO~~	OB
~~92418-XYY~~	~~0.572~~	~~14.53~~	~~0.118~~	~~3.00~~	~~0.354~~	~~8.99~~	~~POLY BAGS~~	~~–~~	~~NO~~	OB
~~93167-XYY~~	~~0.394~~	~~10.01~~	~~0.059~~	~~1.50~~	~~0.235~~	~~5.97~~	~~POLY BAGS~~	~~–~~	~~NO~~	OB
93287-XYYH	0.585	14.86	0.085	2.16	0.400	10.16	POLY BAGS	–	NO	
93944-XYY	0.941	23.90	0.130	3.30	0.711	18.06	POLY BAGS	–	NO	
93992-XYYH	0.415	10.54	0.085	2.16	0.230	5.84	POLY BAGS	–	NO	
94063-XYY	0.376	9.55	0.138	3.51	0.138	3.51	POLY BAGS	NOTE 10	NO	
~~94094-XYY~~	~~0.592~~	~~15.04~~	~~0.314~~	~~7.98~~	~~0.178~~	~~4.52~~	~~POLY BAGS~~	~~–~~	~~NO~~	OB
~~94544-XYY~~	~~0.550~~	~~13.97~~	~~0.130~~	~~3.30~~	~~0.330~~	~~8.38~~	~~POLY BAGS~~	~~NOTE 10~~	~~NO~~	OB
94611-XYYH	0.320	8.13	0.095	2.41	0.125	3.18	POLY BAGS	–	NO	
~~95017-XYYH~~	~~0.560~~	~~14.22~~	~~0.060~~	~~1.52~~	~~0.400~~	~~10.16~~	~~POLY BAGS~~	~~–~~	~~NO~~	OB
~~95103-XYY~~	~~1.064~~	~~27.03~~	~~0.433~~	~~11.00~~	~~0.531~~	~~13.49~~	~~POLY BAGS~~	~~NOTE 10~~	~~NO~~	OB
~~95104-XYY~~	~~0.370~~	~~9.40~~	~~0.126~~	~~3.20~~	~~0.144~~	~~3.66~~	~~POLY BAGS~~	~~NOTE 10~~	~~NO~~	OB
~~95648-XYYH~~	~~0.655~~	~~16.64~~	~~0.155~~	~~3.94~~	~~0.400~~	~~10.16~~	~~POLY BAGS~~	~~–~~	~~NO~~	OB
~~95655-XYY~~	~~1.164~~	~~29.57~~	~~0.095~~	~~2.41~~	~~0.969~~	~~24.61~~	~~POLY BAGS~~	~~NOTE 10~~	~~NO~~	OB
~~98001-XYYH~~	~~0.610~~	~~15.49~~	~~0.420~~	~~10.67~~	~~0.090~~	~~2.29~~	~~POLY BAGS~~	~~–~~	~~NO~~	OB
~~98136-XYYH~~	~~0.475~~	~~12.07~~	~~0.095~~	~~2.41~~	~~0.280~~	~~7.11~~	~~POLY BAGS~~	~~–~~	~~NO~~	OB
~~10004394-XYYH~~	~~0.290~~	~~7.37~~	~~0.095~~	~~2.41~~	~~0.095~~	~~2.41~~	~~POLY BAGS~~	~~–~~	~~NO~~	OB
~~10076764-XXYH~~	~~0.479~~	~~12.19~~	~~0.114~~	~~2.9~~	~~0.265~~	~~6.75~~	~~POLY BAGS~~	~~–~~	~~YES~~	OB
~~10103017-XYY~~	~~0.335~~	~~8.51~~	~~0.130~~	~~3.30~~	~~0.105~~	~~2.67~~	~~POLY BAGS~~	~~–~~	~~NO~~	OB
10121349-XYY	0.626	15.9	0.120	3.05	0.406	10.3	POLY BAGS/TAPE REEL	–	NO	NOTE 1,12

Copyright FCI.

www.fciconnect.com			surface ISO 1302	tolerance std ISO 406 ISO 1101		projection	INCH/MM
			TOLERANCES UNLESS OTHERWISE SPECIFIED				
Dr	T.BREWBAKER	01/05/95	ANGULAR	LINEAR	0.X ±0.3	size A4	Scale 1.000
Eng	T.HANNA	01/05/95			0.XX ±0.15		
Chr	J.MURPHY	01/05/95	0° ±2°		0.XXX ±0.05	ECN	
Appr	T.HANNA	01/05/95	Product family	BERGSTIK		Spec ref	
title	BERGSTIK® II HEADER .100/2.54cc SR STRAIGHT				dwg no 68000		Rev. DC
catalog no					CUSTOMER		sheet 8 of 8

REV F - 2006-04-17

X-ON Electronics

Largest Supplier of Electrical and Electronic Components

Click to view similar products for Headers & Wire Housings ***category:***

Click to view products by Amphenol ***manufacturer:***

Other Similar products are found below :

95000-104TRLF 10135584-644402LF DF62W-EP2022PCA 95000-106TRLF DF62W-2022SCA DF62W-EP2022PC 2203348 DF62W-2022SC 1084018 1029039 1084017 802-10-012-10-002000 1112640 1112639 891-007-9SS-BST1T 000-34000 0008550134 0009482033 0009507031 57102-F02-18ULF 57102-S06-03LF 57202-S52-04LF PCN6-15S-2.5E 0039019024 58102-G61-06LF 582553-1 0009485154 0009508121 0022285053 0050291907 018731A LY20-4P-DT1-P1E-BR 02.125.8002.8 60101931 60598-1 (Cut Strip) M1625-3R/100 61062-3 61082-181009 CSU011177004 636-1427 638009-1 641938-9 641991-4 644168-1 644827-2 647662-1 65039-019ELF 65692-001LF 65781-018 65781-047