NOTICE OF PROPRIETARY RIGHTS THIS DOCUMENT CONTAINS CONFIDENTIAL DATA, INCLUDING TRADE SECRETS, PROPRIETARY TO TIMES MICROWAVE SYSTEMS. DISCLOSURE OF THIS DATA IS EXPRESSLY CONDITIONED UPON YOUR ASSENT THAT ITS USE IS LIMITED TO USE WITHN YOUR COMPANY ONLY. ANY OTHER USE IS STRICTLY PROHIBITED WITHOUT THE PRIOR WRITTEN CONSENT OF TIMES MICROWAVE SYSTEMS.

SYM	REVISION DESCRIPTION	DFTM	DATE	APPD	APPD
A	RELEASED FOR PRODUCTION	Joslen	2015.10.14	TZ	2015.10.14

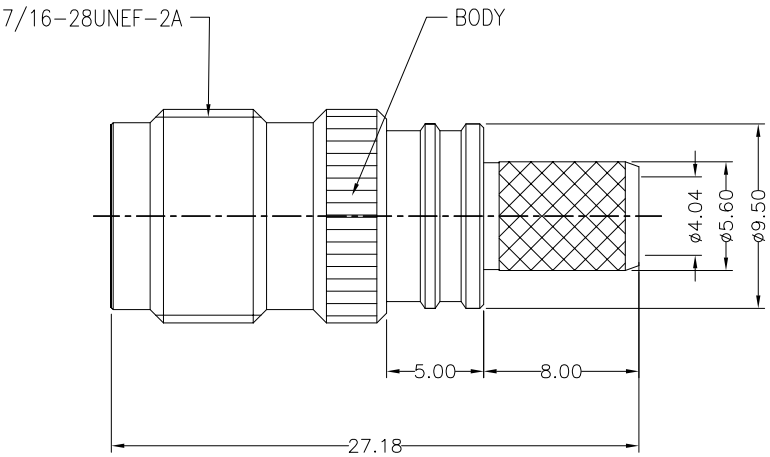

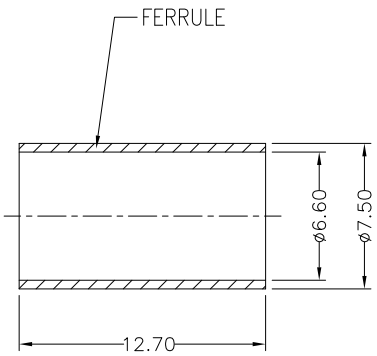

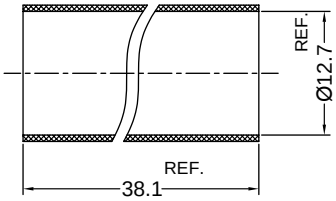

Heat Shrink Tube

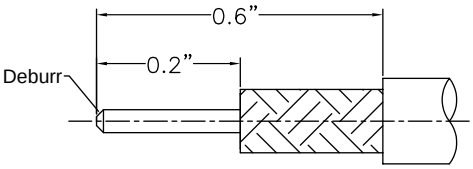

RECOMMENDED CABLE STRIPPING DIM'S
Connector adds: 12.5 mm

I. MATERIALS & FINISHES

Components	Materials	Finishes	Thk. (μ")
Body	Brass	Albaloy	80
Contact pin	QBe2	Gold	50
Ferrule	Brass	Albaloy	80
Insulator	PTFE	--	--

II. ELECTRICAL PROPERTIES

Impedance (Ω):	50
Frequency Range (GHz):	DC to 6 GHz
Working Voltage (V):	1500
Insulation Resistance (MΩ):	≥5000
VSWR:	≤1.30
Insertion Loss(dB, f/GHz):	$-0.1x\sqrt{f}$

III. ENVIRONMENT PROPERTIES

Temperature Range:	-55°c~+155°c
Thermal Shock:	MIL-STD 202G, Meth.107, Cond.B
Vibration:	MIL-STD 202G, Meth.204, Cond.B
Shock:	MIL-STD 202G, Meth.213, Cond I
Climatic Class:	IEC 60068 55/155/56
(2002/95/EC)RoHS:	Compliant

IV. MECHANICAL PROPERTIES

Center Cont.:	Captive
Outer Cont.:	Crimp
Coupling Nut Torque (N.m):	N/A
Cbl-Connector Retention Force (N):	200
Climatic Class:	IEC 60068 55/155/56
Durability (cycles):	500

V. TOOLING

Stripping Tool: 3192-152/CST240A
Crimping Tool: 3192-181/3190-608

According to Standard: IEC 61169-17

MATL:	UNLESS OTHERWISE SPECIFIED			DFTM.	Joslen	TIMES MICROWAVE SYSTEMS An Amphenol Company		
	ALL DIMENSIONS ARE IN mm MACHINED SURFACES FINISH 1.6 RMS MAX. REMOVE ALL BURRS 0.15X45˚ MAX. BREAK MACHINE CORNERS 0.15X45˚ D MAX. FILLET R. TOLERANCES ON DECIMALS .X ±0.3 .XX ±0.15 ANGLES ±2° FRACTIONS ± N/A			DATE	2015.10.14			
				CHKD	KG	EZ-240-TF-X TNC Female (Jack) Straight Non-Solder Pin No Braid Trim Connector for LMR-240 Cable		
USED ON: O				DATE	2015.10.14			
				APPD	TZ			
SCALE: N/A	DWG SIZE A4	DO NOT SCALE DRAWING	CODE IDENT 68999	DATE	2015.10.14	SHT 1 OF 1	3190-6204	REV A

X-ON Electronics

Largest Supplier of Electrical and Electronic Components

Click to view similar products for RF Connectors / Coaxial Connectors ***category:***

Click to view products by Amphenol ***manufacturer:***

Other Similar products are found below :

8915-1511-000 89674-0827 6001-7071-019 6002-7051-003 6002-7551-202 6059674-1 619550-1 630059-000 M39030/3-01N M3933/25-36N 6500-7071-046 6769 CX050L2AQ 7002-1542-011 7004-1512-000 7009-1511-004 7010-1511-000 7029-1511-060 7101-1541-010 7101-1571-002 7105-1521-002 7145-1521-002 7203-1571-003 7209-1511-011 7210-1511-015 7210-1511-019 73137-5015 73216-2241 7325-1512-000 73404-2300 7405-1521-005 7405-1521-802 7406-1521-005 8527 8547 FS11V 8808-1511-001 9049-9513-000 9074-9513-000 9101-9573-002 910A205F 9130-9573-002 PL11SC-026 PL375-33 PL40-5 PL71-9 PL74C-221 PL75MC-217 PL803-7 980-8666-005