NOTES:

1. MATERIALS AND FINISHES:
   BODY, RETAINING RING, CONTACT - BERYLLIUM COPPER, GOLD PLATING
   HOUSING, COVER - BRASS, GOLD PLATING
   INSULATOR - PTFE, NATURAL
   SPACER - ULTEM, NATURAL

2. ELECTRICAL:
   A. IMPEDANCE: 50 OHM
   B. FREQUENCY RANGE: DC-12 GHz
   C. VSWR(RETURN LOSS): 1.10 MAX. @ DC-6 GHz
      1.30 MAX. @ 6-12 GHz
   D. DIELECTRIC WITHSTANDING VOLTAGE: 500 VRMS, MIN.

3. MECHANICAL:
   A. DURABILITY: 100 CYCLES MIN. WHEN MATED WITH FULL DETENT JACK
      500 CYCLES MIN. WHEN MATED WITH LIMITED DETENT JACK
      1000 CYCLES MIN. WHEN MATED WITH SMOOTH BORE JACK
   B. TEMPERATURE RANGE: -65°C TO 165°C

4. PACKAGING:
   A. QUANTITY: SINGLE PACK
   B. MARKING: PACKAGING TO BE MARKED
      "AMPHENOL RF, SMP-FR-C08-3-R & DATE CODE"

5. CABLE ASSEMBLY INSTRUCTIONS:
   A. TRIM CABLE AS SHOWN.
   B. SLIDE FERRULE AND SPACER ONTO CABLE.
   C. INSERT CABLE INTO BODY AND CRIMP BRAID OVER BODY USING .151" HEX.
   D. AFTER CRIMPING, SOLDER CABLE CENTER CONDUCTOR TO CONTACT.
      SOLDER MUST NOT PROTRUDE ABOVE CENTER CONTACT END SURFACE.
   E. PRESS REAR INSULATOR DISC INTO BODY UNTIL IT BOTTOMS.
   F. INSERT CAP UNTIL FLUSH WITH SURFACE OF HOUSING. INSERTION TOOLING
      MUST ENSURE THAT CAP SURFACE IS PARALLEL TO BODY SURFACE.

6 SHOWS CABLE ENTRY DIMENSIONS.

REVISIONS				
REV	DESCRIPTION	DATE	ECN	APPR
A	RELEASE TO MFG.	30-Apr-20	15041	S.HSIEH

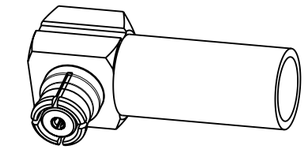

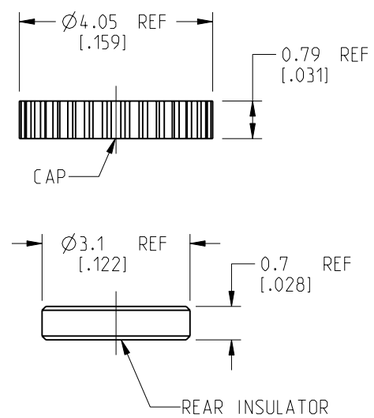

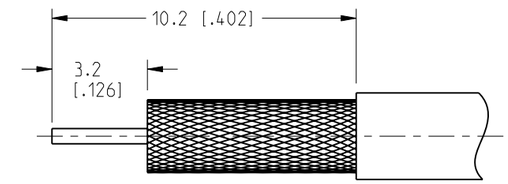

RECOMMENDED
CABLE STRIPPING DIMENSIONS

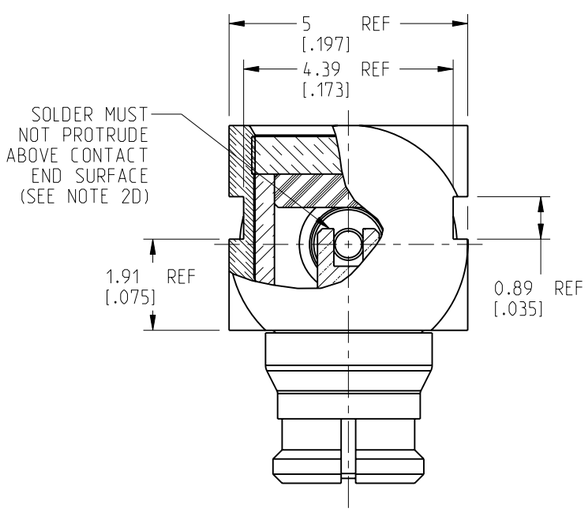

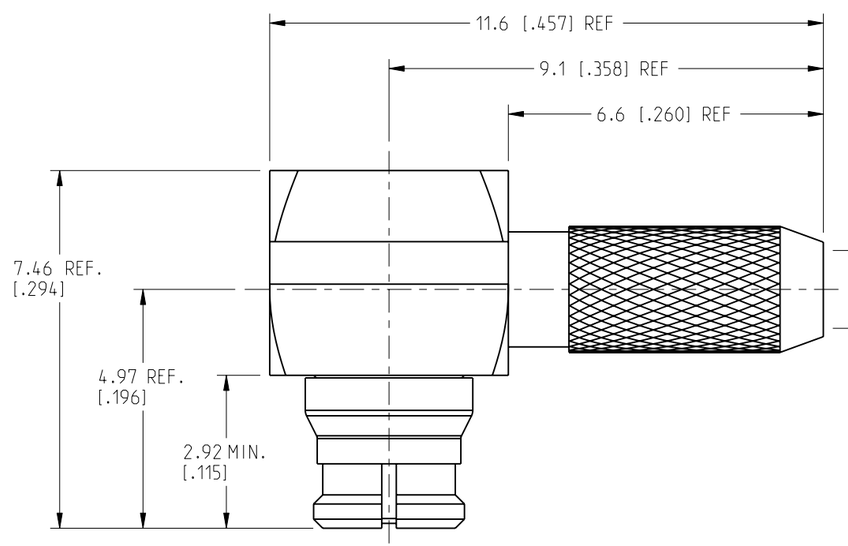

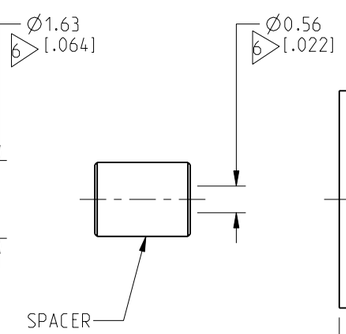

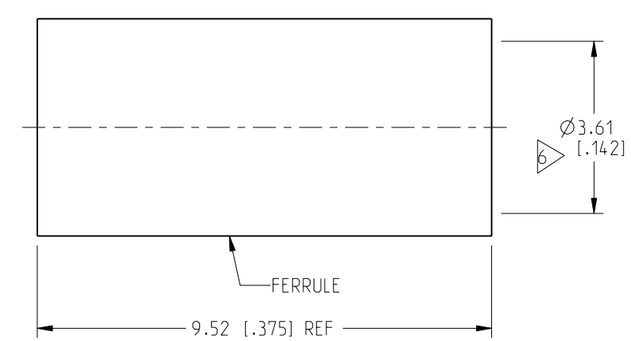

CUSTOMER OUTLINE DRAWING

ALL OTHER SHEETS ARE FOR INTERNAL USE ONLY

NOTICE: These drawings, specifications, or other data (1) are, and remain the property of Amphenol corp. (2) must be returned upon request; and (3) are confidential and not to be disclosed to any person other than those to whom they are given by Amphenol Corp. The furnishing of these drawings, specifications, or other data by Amphenol Corp., or to any other person to anyone for any purpose is not to be regarded by implication or otherwise in any manner licensing, granting rights to permitting such holder or any other person to manufacture, use or sell any product, process or design, patented or otherwise, that may in any way be related to or disclosed by said drawings, specifications, or other data.

THIRD ANGLE PROJ.

REFERENCE	EAR#
SMP-FR-C08-2	8449

UNLESS OTHERWISE SPECIFIED
DIMENSIONS ARE METRIC [INCHES] AND TOLERANCES ARE:

<0.5mm = ±0.05mm	[<0.020 = ±0.002]
>0.5 - 6mm = ±0.1mm	[>0.020 - 0.236 = ±0.004]
>6.00 - 30mm = ±0.2mm	[>0.236 - 1.181 = ±0.008]
>30.00 - 120mm = ±0.3mm	[>1.181 - 4.725 = ±0.012]

ANGLES = ±1°

MATERIAL: SEE NOTE 1

ENGINEER: M.ZHANG

DATE: 30-Apr-20

TITLE: SMP R/A PLUG FOR RD-316 CABLE

SHEET NO. 2 OF 2

SCALE: 8.0:1.0

Amphenol RF

SIZE		REV
B	DRAWING NO. SMP-FR-C08-3-R	A
	ITEM NO. SMP-FR-C08-3-R	
	PART NO. SMP-FR-C08-3-R	

X-ON Electronics

Largest Supplier of Electrical and Electronic Components

Click to view similar products for RF Connectors / Coaxial Connectors ***category:***

Click to view products by Amphenol ***manufacturer:***

Other Similar products are found below :

8915-1511-000 89674-0827 6001-7071-019 6002-7051-003 6002-7551-202 6059674-1 619550-1 630059-000 M39030/3-01N M3933/25-36N 6500-7071-046 6769 CX050L2AQ 7002-1542-011 7004-1512-000 7009-1511-004 7010-1511-000 7029-1511-060 7101-1541-010 7101-1571-002 7105-1521-002 7145-1521-002 7203-1571-003 7209-1511-011 7210-1511-015 7210-1511-019 73137-5015 73216-2241 7325-1512-000 73404-2300 7405-1521-005 7405-1521-802 7406-1521-005 8527 8547 FS11V 8808-1511-001 9049-9513-000 9074-9513-000 9101-9573-002 910A205F 9130-9573-002 PL11SC-026 PL375-33 PL40-5 PL71-9 PL74C-221 PL75MC-217 PL803-7 980-8666-005