CCD Signal Processors with Integrated Timing Driver

AD9848/AD9849

FEATURES

AD9848: 10-Bit, 20 MHz Version
AD9849: 12-Bit, 30 MHz Version
Correlated Double Sampler (CDS)
–2 dB to +10 dB Pixel Gain Amplifier (*PxGA*®)
2 dB to 36 dB 10-Bit Variable Gain Amplifier (VGA)
10-Bit 20 MHz A/D Converter (AD9848)
12-Bit 30 MHz A/D Converter (AD9849)
Black Level Clamp with Variable Level Control
Complete On-Chip Timing Driver
***Precision Timing*™ Core with 1 ns Resolution @ 20 MSPS**
On-Chip 3 V Horizontal and RG Drivers (AD9848)
On-Chip 5 V Horizontal and RG Drivers (AD9849)
48-Lead LQFP Package

APPLICATIONS

Digital Still Cameras

PRODUCT DESCRIPTION

The AD9848 and AD9849 are highly integrated CCD signal processors for digital still camera applications. Both include a complete analog front end with A/D conversion, combined with a programmable timing driver. The *Precision Timing* core allows adjustment of high speed clocks with approximately 1 ns resolution.

The AD9848 is specified at pixel rates of 20 MHz, and the AD9849 is specified at 30 MHz. The analog front end includes black level clamping, CDS, *PxGA*, VGA, and a 10-bit or 12-bit A/D converter. The timing driver provides the high speed CCD clock drivers for RG and H1–H4. Operation is programmed using a 3-wire serial interface.

Packaged in a space saving 48-lead LQFP, the AD9848 and AD9849 are specified over an operating temperature range of –20°C to +85°C.

FUNCTIONAL BLOCK DIAGRAM

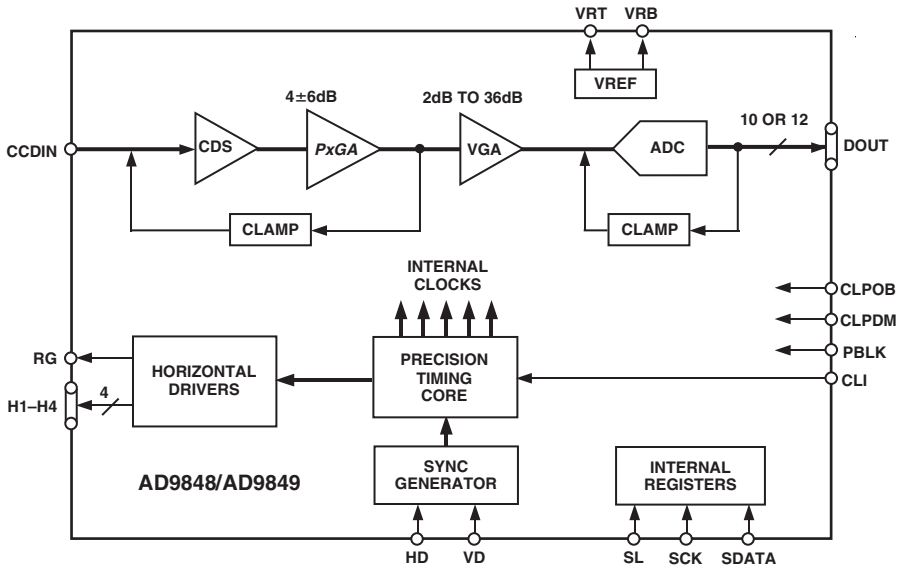

PxGA is a registered trademark and *Precision Timing* is a trademark of Analog Devices, Inc.

REV. A

Information furnished by Analog Devices is believed to be accurate and reliable. However, no responsibility is assumed by Analog Devices for its use, nor for any infringements of patents or other rights of third parties that may result from its use. No license is granted by implication or otherwise under any patent or patent rights of Analog Devices.

One Technology Way, P.O. Box 9106, Norwood, MA 02062-9106, U.S.A.
Tel: 781/329-4700 **www.analog.com**
Fax: 781/326-8703
© 2003 Analog Devices, Inc.

AD9848/AD9849–SPECIFICATIONS

GENERAL SPECIFICATIONS

Parameter	Min	Typ	Max	Unit
TEMPERATURE RANGE				
Operating	–20		+85	°C
Storage	–65		+150	°C
MAXIMUM CLOCK RATE				
AD9848	20			MHz
AD9849	30			MHz
POWER SUPPLY VOLTAGE, AD9848				
Analog (AVDD1, 2, 3)	2.7		3.6	V
Digital1 (DVDD1) H1–H4	2.7		3.6	V
Digital2 (DVDD2) RG	2.7		3.6	V
Digital3 (DVDD3) D0–D11		3.0		V
Digital4 (DVDD4) All Other Digital		3.0		V
POWER SUPPLY VOLTAGE, AD9849				
Analog (AVDD1, 2, 3)	2.7		3.6	V
Digital1 (DVDD1) H1–H4	3.0		5.5	V
Digital2 (DVDD2) RG	3.0		5.5	V
Digital3 (DVDD3) D0–D11		3.0		V
Digital4 (DVDD4) All Other Digital		3.0		V
POWER DISSIPATION, AD9848				
20 MHz, DVDD1, 2 = 3 V, 100 pF H Loading		220		mW
Total Shutdown Mode		1		mW
POWER DISSIPATION, AD9849				
30 MHz, DVDD1, 2 = 5 V, 100 pF H Loading		450		mW
Total Shutdown Mode		1		mW

Specifications subject to change without notice.

DIGITAL SPECIFICATIONS

(T_{MIN} to T_{MAX}, AVDD1 = DVDD3, DVDD4 = 2.7 V, DVDD1, DVDD2 = 2.7 V (AD9848), DVDD1, DVDD2 = 5.25 V (AD9849), C_L = 20 pF, unless otherwise noted.)

Parameter	Symbol	Min	Typ	Max	Unit
LOGIC INPUTS					
High Level Input Voltage	V_{IH}	2.1			V
Low Level Input Voltage	V_{IL}			0.6	V
High Level Input Current	I_{IH}		10		µA
Low Level Input Current	I_{IL}		10		µA
Input Capacitance	C_{IN}		10		pF
LOGIC OUTPUTS					
High Level Output Voltage, I_{OH} = 2 mA	V_{OH}	2.2			V
Low Level Output Voltage, I_{OL} = 2 mA	V_{OL}			0.5	V
CLI INPUT					
High Level Input Voltage (AVDD1, 2 + 0.5 V)	V_{IH-CLI}	1.85			V
Low Level Input Voltage	V_{IL-CLI}			0.85	V
RG AND H-DRIVER OUTPUTS, AD9848					
High Level Output Voltage (DVDD1, 2 – 0.5 V)	V_{OH}	2.2			V
Low Level Output Voltage	V_{OL}			0.5	V
Maximum Output Current (Programmable)		24			mA
Maximum Load Capacitance		100			pF
RG AND H-DRIVER OUTPUTS, AD9849					
High Level Output Voltage (DVDD1, 2 – 0.5 V)	V_{OH}	4.75			V
Low Level Output Voltage	V_{OL}			0.5	V
Maximum Output Current (Programmable)		24			mA
Maximum Load Capacitance		100			pF

Specifications subject to change without notice.

AD9848–ANALOG SPECIFICATIONS (T_{MIN} to T_{MAX}, AVDD = DVDD = 3.0 V, f_{CLI} = 20 MHz, unless otherwise noted.)

Parameter	Min	Typ	Max	Unit	Notes
CDS					
Gain		0		dB	
Allowable CCD Reset Transient*		500		mV	See Input Waveform in Note
Max Input Range Before Saturation*	1.0			V p-p	
Max CCD Black Pixel Amplitude*		150		mV	
PIXEL GAIN AMPLIFIER (*PxGA*)					
Max Input Range	1.0			V p-p	
Max Output Range	1.6			V p-p	
Gain Control Resolution		64		Steps	
Gain Monotonicity		Guaranteed			
Gain Range					
Min Gain (32)		–2		dB	
Med Gain (0)		4		dB	Medium Gain (4 dB) Is Default Setting
Max Gain (31)		10		dB	
VARIABLE GAIN AMPLIFIER (VGA)					
Max Input Range	1.6			V p-p	
Max Output Range	2.0			V p-p	
Gain Control Resolution		1024		Steps	
Gain Monotonicity		Guaranteed			
Gain Range					
Low Gain (91)		2		dB	
Max Gain (1023)		36		dB	
BLACK LEVEL CLAMP					
Clamp Level Resolution		256		Steps	
Clamp Level					Measured at ADC Output
Min Clamp Level (0)		0		LSB	
Max Clamp Level (255)		63.75		LSB	
A/D CONVERTER					
Resolution	10			Bits	
Differential Nonlinearity (DNL)		±0.4	±1.0	LSB	
No Missing Codes		Guaranteed			
Full-Scale Input Voltage		2.0		V	
VOLTAGE REFERENCE					
Reference Top Voltage (VRT)		2.0		V	
Reference Bottom Voltage (VRB)		1.0		V	
SYSTEM PERFORMANCE					
VGA Gain Accuracy					Specifications Include Entire Signal Chain Gain Includes 4 dB Default *PxGA* Gain
Low Gain (91)	5	6	7	dB	
Max Gain (1023)	38	39.5	41	dB	
Peak Nonlinearity, 500 mV Input Signal		0.2		%	12 dB Gain Applied
Total Output Noise		0.2		LSB rms	AC Grounded Input, 6 dB Gain Applied
Power Supply Rejection (PSR)		40		dB	Measured with Step Change on Supply

*Input signal characteristics defined as follows:

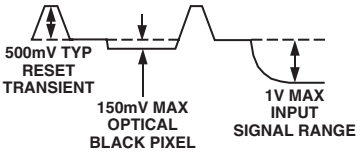

Specifications subject to change without notice.

AD9849–ANALOG SPECIFICATIONS (T_{MIN} to T_{MAX}, AVDD = DVDD = 3.0 V, f_{CLI} = 30 MHz, unless otherwise noted.)

Parameter	Min	Typ	Max	Unit	Notes
CDS					
Gain		0		dB	
Allowable CCD Reset Transient*		500		mV	See Input Waveform in Note
Max Input Range Before Saturation*	1.0			V p-p	
Max CCD Black Pixel Amplitude*		150		mV	
PIXEL GAIN AMPLIFIER (*PxGA*)					
Max Input Range	1.0			V p-p	
Max Output Range	1.6			V p-p	
Gain Control Resolution		64		Steps	
Gain Monotonicity		Guaranteed			
Gain Range					
Min Gain (32)		–2		dB	
Med Gain (0)		4		dB	Medium Gain (4 dB) Is Default Setting
Max Gain (31)		10		dB	
VARIABLE GAIN AMPLIFIER (VGA)					
Max Input Range	1.6			V p-p	
Max Output Range	2.0			V p-p	
Gain Control Resolution		1024		Steps	
Gain Monotonicity		Guaranteed			
Gain Range					
Low Gain (91)		2		dB	
Max Gain (1023)		36		dB	
BLACK LEVEL CLAMP					
Clamp Level Resolution		256		Steps	
Clamp Level					Measured at ADC Output
Min Clamp Level (0)		0		LSB	
Max Clamp Level (255)		255		LSB	
A/D CONVERTER					
Resolution	12			Bits	
Differential Nonlinearity (DNL)		±0.5	±1.0	LSB	
No Missing Codes		Guaranteed			
Full-Scale Input Voltage		2.0		V	
VOLTAGE REFERENCE					
Reference Top Voltage (VRT)		2.0		V	
Reference Bottom Voltage (VRB)		1.0		V	
SYSTEM PERFORMANCE					
Gain Accuracy					Specifications Include Entire Signal Chain Gain Includes 4 dB Default *PxGA* Gain
Low Gain (91)	5	6	7	dB	
Max Gain (1023)	38	39.5	41	dB	
Peak Nonlinearity, 500 mV Input Signal		0.2		%	12 dB Gain Applied
Total Output Noise		0.6		LSB rms	AC Grounded Input, 6 dB Gain Applied
Power Supply Rejection (PSR)		40		dB	Measured with Step Change on Supply

*Input signal characteristics defined as follows:

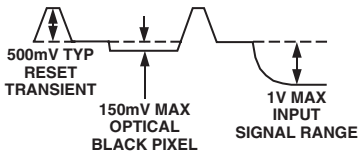

Specifications subject to change without notice.

TIMING SPECIFICATIONS

(C_L = 20 pF, f_{CLI} = 20 MHz (AD9848) or 30 MHz (AD9849), Serial Timing in Figures 3a and 3b, unless otherwise noted.)

Parameter	Symbol	Min	Typ	Max	Unit
MASTER CLOCK (CLI), AD9848					
CLI Clock Period	t_{CLI}	50			ns
CLI High/Low Pulsewidth	t_{ADC}	25			ns
Delay From CLI to Internal Pixel Period Position	t_{CLIDLY}		6		ns
MASTER CLOCK (CLI), AD9849					
CLI Clock Period	t_{CONV}	33.33			ns
CLI High/Low Pulsewidth	t_{ADC}	16.67			ns
EXTERNAL MODE CLAMPING					
CLPDM Pulsewidth	t_{CDM}	4	10		Pixels
CLPOB Pulsewidth*	t_{COB}	2	20		Pixels
SAMPLE CLOCKS					
SHP Rising Edge to SHD Rising Edge (AD9848)	t_{S1}	20			ns
SHP Rising Edge to SHD Rising Edge (AD9849)	t_{S1}	13			ns
DATA OUTPUTS					
Output Delay from Programmed Edge	t_{OD}		6		ns
Pipeline Delay			9		Cycles
SERIAL INTERFACE					
Maximum SCK Frequency	f_{SCLK}	10			MHz
SL to SCK Setup Time	t_{LS}	10			ns
SCK to SL Hold Time	t_{LH}	10			ns
SDATA Valid to SCK Rising Edge Setup	t_{DS}	10			ns
SCK Falling Edge to SDATA Valid Hold	t_{DH}	10			ns
SCK Falling Edge to SDATA Valid Read	t_{DV}	10			ns

*Maximum CLPOB pulsewidth is for functional operation only. Wider typical pulses are recommended to achieve low noise clamp reference.

Specifications subject to change without notice.

ABSOLUTE MAXIMUM RATINGS

Parameter	With Respect To	Min	Max	Unit
AVDD1, 2, 3	AVSS	–0.3	+3.9	V
DVDD1, DVDD2 (AD9848)	DVSS	–0.3	+3.9	V
DVDD1, DVDD2 (AD9849)	DVSS	–0.3	+5.5	V
DVDD3, 4	DVSS	–0.3	+3.9	V
Digital Outputs	DVSS3	–0.3	DVDD3 + 0.3	V
CLPOB, CLPDM, BLK	DVSS4	–0.3	DVDD4 + 0.3	V
CLI	AVSS	–0.3	AVDD + 0.3	V
SCK, SL, SDATA	DVSS4	–0.3	DVDD4 + 0.3	V
VRT, VRB	AVSS	–0.3	AVDD + 0.3	V
BYP1–3, CCDIN	AVSS	–0.3	AVDD + 0.3	V
Junction Temperature			150	°C
Lead Temperature (10 sec)			300	°C

THERMAL CHARACTERISTICS

Thermal Resistance

48-Lead LQFP Package

θ_{JA} = 92°C

ORDERING GUIDE

Model	Temperature Range	Package Description	Package Option
AD9848AKST	–20°C to +85°C	Thin Plastic Quad Flatpack (LQFP)	ST-48
AD9849AKST	–20°C to +85°C	Thin Plastic Quad Flatpack (LQFP)	ST-48

CAUTION

ESD (electrostatic discharge) sensitive device. Electrostatic charges as high as 4000 V readily accumulate on the human body and test equipment and can discharge without detection. Although the AD9848/AD9849 features proprietary ESD protection circuitry, permanent damage may occur on devices subjected to high energy electrostatic discharges. Therefore, proper ESD precautions are recommended to avoid performance degradation or loss of functionality.

PIN CONFIGURATION

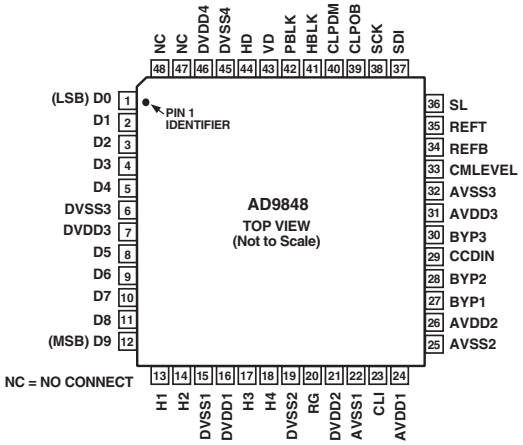

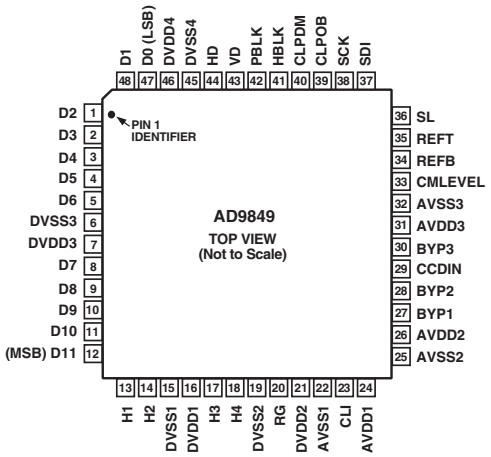

PIN FUNCTION DESCRIPTIONS

Pin	Mnemonic	Type*	Description
1–5	D0–D4	DO	Data Outputs AD9848 Only
1–5	D2–D6	DO	Data Outputs AD9849 Only
6	DVSS3	P	Digital Ground 3 – Data Outputs
7	DVDD3	P	Digital Supply 3 – Data Outputs
8–12	D5–D9	DO	Data Outputs (D9 is MSB) AD9848 Only
8–12	D7–D11	DO	Data Outputs (D9 is MSB) AD9849 Only
13, 14	H1, H2	DO	Horizontal Clocks (to CCD)
15	DVSS1	P	Digital Ground 1 – H Drivers
16	DVDD1	P	Digital Supply 1 – H Drivers
17, 18	H3, H4	DO	Horizontal Clocks (to CCD)
19	DVSS2	P	Digital Ground 1 – RG Driver
20	RG	DO	Reset Gate Clock (to CCD)
21	DVDD2	P	Digital Supply 2 – RG Driver
22	AVSS1	P	Analog Ground 1
23	CLI	DI	Master Clock Input
24	AVDD1	P	Analog Supply 1
25	AVSS2	P	Analog Ground 2
26	AVDD2	P	Analog Supply 2
27	BYP1	AO	Bypass Pin (0.1 µF to AVSS)
28	BYP2	AO	Bypass Pin (0.1 µF to AVSS)
29	CCDIN	AI	Analog Input for CCD Signal
30	BYP3	AO	Bypass Pin (0.1 µF to AVSS)
31	AVDD3	P	Analog Supply 3
32	AVSS3	P	Analog Ground 3
33	CMLEVEL	AO	Internal Bias Level Decoupling (0.1 µF to AVSS)
34	REFB	AO	Reference Bottom Decoupling (1.0 µF to AVSS)
35	REFT	AO	Reference Top Decoupling (1.0 µF to AVSS)
36	SL	DI	3-Wire Serial Load (from µP)
37	SDI	DI	3-Wire Serial Data Input (from µP)
38	SCK	DI	3-Wire Serial Clock (from µP)
39	CLPOB	DI	Optical Black Clamp Pulse
40	CLPDM	DI	Dummy Black Clamp Pulse
41	HBLK	DI	HCLK Blanking Pulse
42	PBLK	DI	Preblanking Pulse
43	VD	DI	Vertical Sync Pulse
44	HD	DI	Horizontal Sync Pulse
45	DVSS4	P	Digital Ground 4 – VD, HD, CLPOB, CLPDM, HBLK, PBLK, SCK, SL, SDATA
46	DVDD4	P	Digital Supply 4 – VD, HD, CLPOB, CLPDM, HBLK, PBLK, CK, SL, SDATA
47, 48	NC	NC	Internally Not Connected AD9848 Only
47, 48	D0, D1	DO	Data Output (D0 is LSB) AD9849 Only

*Type: AI = Analog Input, AO = Analog Output, DI = Digital Input, DO = Digital Output, P = Power

EQUIVALENT INPUT/OUTPUT CIRCUITS

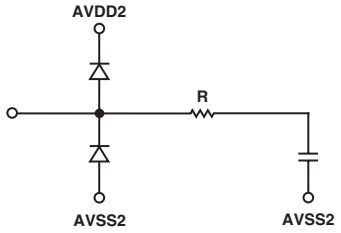

Circuit 1. CCDIN (Pin 29)

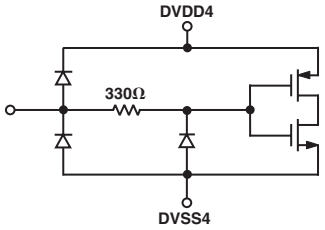

Circuit 4. Digital Inputs (Pins 36–44)

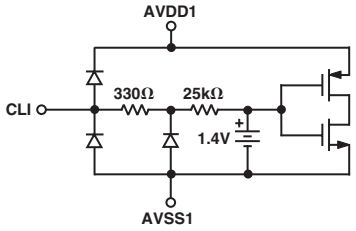

Circuit 2. CLI (Pin 23)

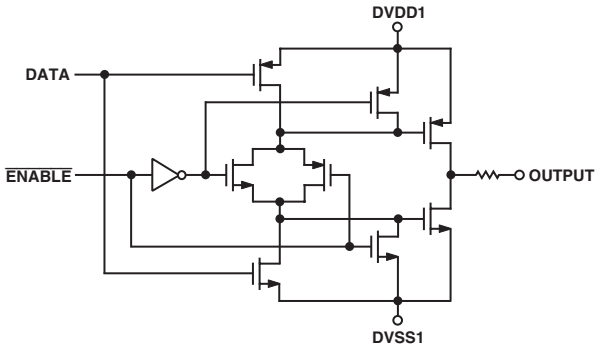

Circuit 5. H1–H4 and RG (Pins 13, 14, 17, 18, 20)

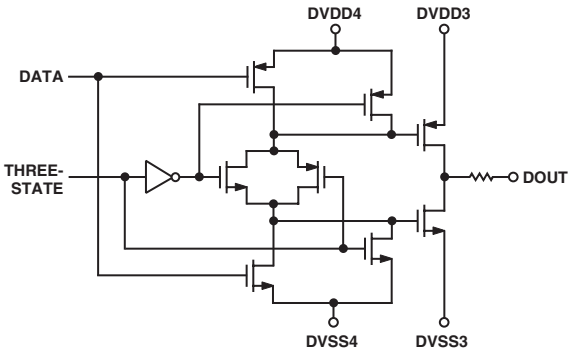

Circuit 3. Data Outputs D0–D11 (Pins 1–5, 8–12, 47–48)

AD9848/AD9849—Typical Performance Characteristics

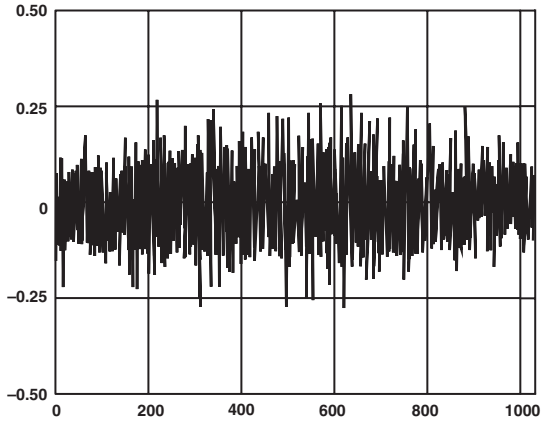

TPC 1. AD9848 Typical DNL

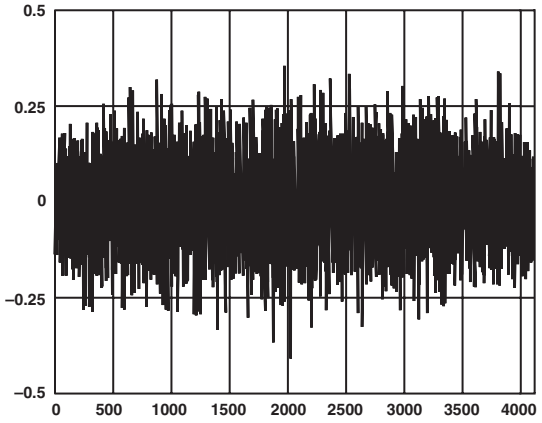

TPC 3. AD9849 Typical DNL

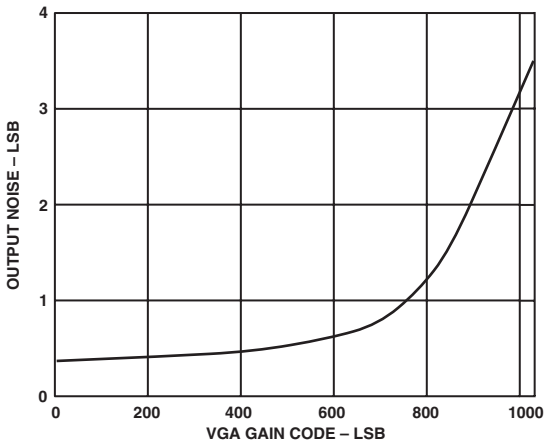

TPC 2. AD9848 Output Noise vs. VGA Gain Setting

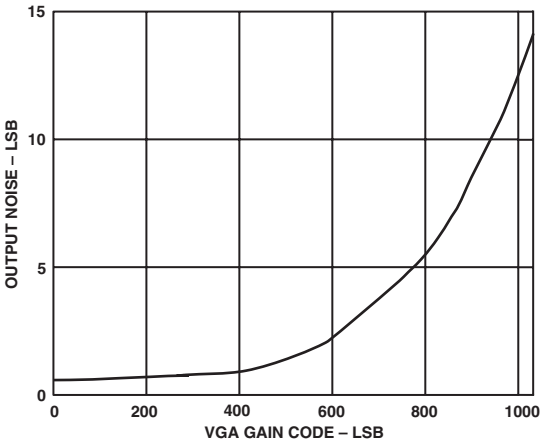

TPC 4. AD9849 Output Noise vs. VGA Gain Setting

SYSTEM OVERVIEW

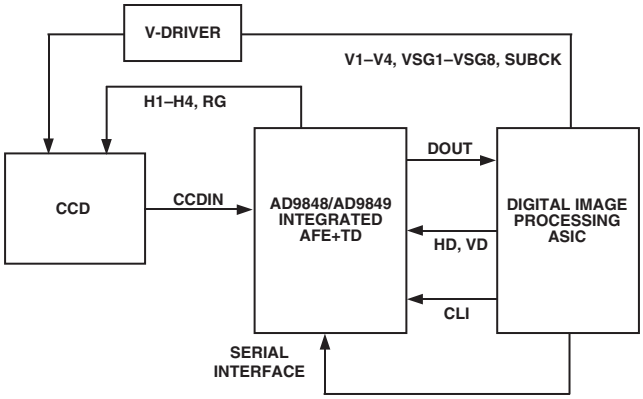

Figure 1a. Typical Application (Internal Mode)

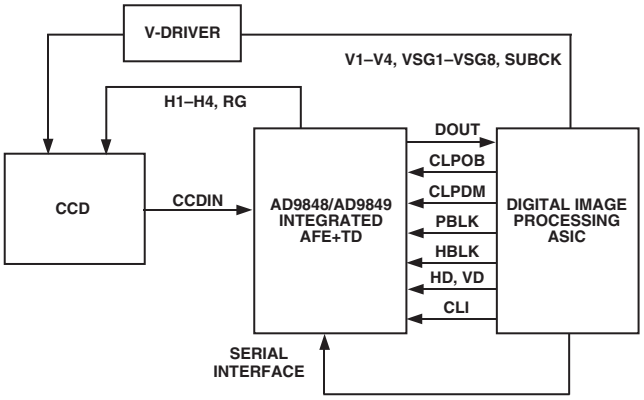

Figure 1b. Typical Application (External Mode)

Figures 1a and 1b show the typical system application diagrams for the AD9848/AD9849. The CCD output is processed by the AD9848/AD9849's AFE circuitry, which consists of a CDS, *PxGA*, VGA, black level clamp, and A/D converter. The digitized pixel information is sent to the digital image processor chip, where all post-processing and compression occurs. To operate the CCD, CCD timing parameters are programmed into the AD9848/AD9849 from the image processor, through the 3-wire serial interface. From the system master clock, CLI, provided by the image processor, the AD9848/AD9849 generates the high speed CCD clocks and all internal AFE clocks. All AD9848/AD9849 clocks are synchronized with VD and HD.

Figure 1a shows the AD9848/AD9849 used in Internal Mode, in which all the horizontal pulses (CLPOB, CLPDM, PBLK, and HBLK) are programmed and generated internally. Figure 1b shows the AD9848/AD9849 operating in External Mode, in which the horizontal pulses are supplied externally by the image processor.

The H-drivers for H1–H4 and RG are included in the AD9848/AD9849, allowing these clocks to be directly connected to the CCD. H-drive voltage of 5 V is supported in the AD9849.

Figure 2 shows the horizontal and vertical counter dimensions for the AD9848/AD9849. All internal horizontal clocking is programmed using these dimensions to specify line and pixel locations.

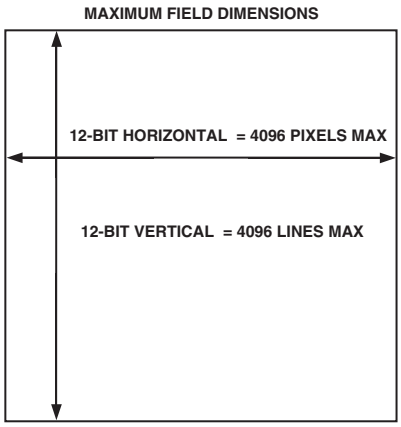

Figure 2. Vertical and Horizontal Counters

SERIAL INTERFACE TIMING

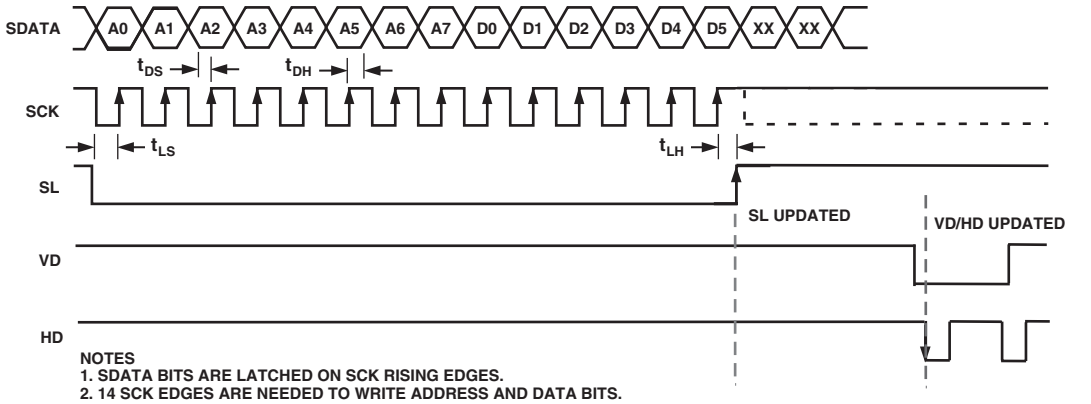

NOTES
1. SDATA BITS ARE LATCHED ON SCK RISING EDGES.
2. 14 SCK EDGES ARE NEEDED TO WRITE ADDRESS AND DATA BITS.
3. FOR 16-BIT SYSTEMS, TWO EXTRA DUMMY BITS MAY BE WRITTEN. DUMMY BITS ARE IGNORED.
4. NEW DATA IS UPDATED AT EITHER THE SL RISING EDGE, OR AT THE HD FALLING EDGE AFTER THE NEXT VD FALLING EDGE.
5. VD/HD UPDATE POSITION MAY BE DELAYED TO ANY HD FALLING EDGE IN THE FIELD USING THE UPDATE REGISTER.

Figure 3a. Serial Write Operation

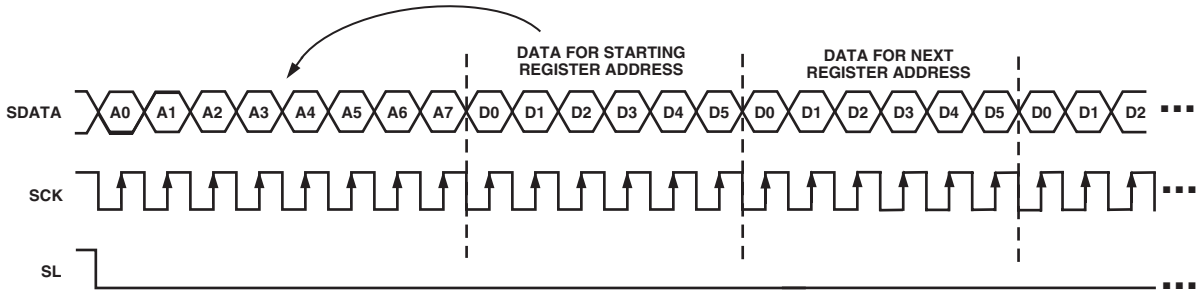

NOTES
1. MULTIPLE SEQUENTIAL REGISTERS MAY BE LOADED CONTINUOUSLY.
2. THE FIRST (LOWEST ADDRESS) REGISTER ADDRESS IS WRITTEN, FOLLOWED BY MULTIPLE 6-BIT DATA-WORDS.
3. THE ADDRESS WILL AUTOMATICALLY INCREMENT WITH EACH 6-BIT DATA-WORD (ALL 6 BITS MUST BE WRITTEN).
4. SL IS HELD LOW UNTIL THE LAST DESIRED REGISTER HAS BEEN LOADED.
5. NEW DATA IS UPDATED AT EITHER THE SL RISING EDGE, OR AT THE HD FALLING EDGE AFTER THE NEXT VD FALLING EDGE.

Figure 3b. Continuous Serial Write Operation

COMPLETE REGISTER LISTING

Table I.

Register	Description	Register	Description
oprmode	AFE Operation Modes	h1drv	H1 Drive Current
ctlmode	AFE Control Modes	h2drv	H2 Drive Current
preventpdate	Prevents Loading of VD-Updated Registers	h3drv	H3 Drive Current
readback	Enables Serial Register Readback Mode	h4drv	H4 Drive Current
vdhdpol	VD/HD Active Polarity	rgpol	RG Polarity
fieldval	Internal Field Pulse Value	rgposloc	RG Positive Edge Location
hblkretime	Retimes the H1 hblk to Internal Clock	rgnegloc	RG Negative Edge Location
tgcore_rstb	Reset Bar Signal for Internal TG Core	rgdrv	RG Drive Current
h12pol	H1/H2 Polarity Control	shpposloc	SHP Sample Location
h1posloc	H1 Positive Edge Location	shdposloc	SHD Sample Location
h1negloc	H1 Negative Edge Location		

NOTES
1. All addresses and default values are expressed in hexadecimal.
2. All registers are VD/HD updated as shown in Figure 3a, except for the above-listed registers that are SL updated.

Accessing a Double-Wide Register

There are many double-wide registers in the AD9848/AD9849, for example, oprmode, clpdmtog1_0, and clpdmscp3, and so on. These registers are configured into two consecutive 6-bit registers with the least significant six bits located in the lower of the two addresses and the remaining most significant bits located in the higher of the two addresses. For example, the six LSBs of the clpdmscp3 register, clpdmscp3[5:0], are located at Address 0x81. The most significant six bits of the clpdmscp3 register, clpdmscp3[11:6], are located at Address 0x82. The following rules must be followed when accessing double-wide registers:

1. When accessing a double-wide register, BOTH addresses must be written to.
2. The lower of the two consecutive addresses for the double-wide register must be written to first. In the example of the clpdmscp3 register, the contents of Address 0x81 must be written first followed by the contents of Address 0x82. The register will be updated after the completion of the write to Register 0x82, either at the next SL rising edge or next VD/HD falling edge.
3. A single write to the lower of the two consecutive addresses of a double-wide register that is not followed by a write to the higher address of the registers is not permitted. This will not update the register.
4. A single write to the higher of the two consecutive addresses of a double-wide register that is not preceded by a write to the lower of the two addresses is not permitted. Although the write to the higher address will update the full double-wide register, the lower six bits of the register will be written with an indeterminate value if the lower address was not written first.

Address	Bit Content	Width	Default Value	Register Name	Register Description
AFE Registers # Bits 56					
00	[5:0]	6	00	oprmode[5:0]	AFE Operation Mode (See AFE Register Breakdown)
01	[1:0]	2	00	oprmode[7:6]	
02	[5:0]	6	16	ccdgain[5:0]	VGA Gain
03	[3:0]	4	02	ccdgain[9:6]	
04	[5:0]	6	00	refblack[5:0]	Black Clamp Level
05	[1:0]	2	02	refblack[7:6]	
06	[5:0]	6	00	ctlmode	Control Mode (See AFE Register Breakdown)
07	[5:0]	6	00	pxga gain0	*PxGA* Color 0 Gain
08	[5:0]	6	00	pxga gain1	*PxGA* Color 1 Gain
09	[5:0]	6	00	pxga gain2	*PxGA* Color 2 Gain
0A	[5:0]	6	00	pxga gain3	*PxGA* Color 3 Gain

Miscellaneous/Extra # Bits 26					
0F	[5:0]	6	00	INITIAL2	See Recommended Power-Up Sequence Section. Should be set to “4” decimal (000100).
16	[0]	1	00	out_cont	Output Control (0 = Make All Outputs DC Inactive)
17	[5:0]	6	00	update[5:0]	Serial Data Update Control. Sets the line within the field
18	[5:0]	6	00	update[11:6]	for serial data update to occur.
19	[0]	1	00	preventupdate	Prevent the Update of the “VD/HD Updated” Registers
1B	[5:0]	6	00	doutphase	DOUT Phase Control
1C	[0]	1	00	disablerestore	Disable CCDIN DC Restore Circuit during PBLK (1 = Disable)
1D	[0]	1	00	vdhdpol	VD/HD Active Polarity (0 = Low Active, 1 = High Active)
1E	[0]	1	01	fieldval	Internal Field Pulse Value (0 = Next Field Odd, 1 = Next Field Even)
1F	[0]	1	00	hblkretime	Re-Sync hblk to h1 Clock
20	[5:0]	6	00	INITIAL1	See Recommended Power-Up Sequence Section. Should be set to “53” decimal (110101).
26	[0]	1	00	tgcore_rstb	TG Core Reset_Bar (0 = Hold TG Core in Reset, 1 = Resume Normal Operation)

Address	Bit Content	Width	Default Value	Register Name	Register Description
CLPDM # Bits 146					
64	[0]	1	01	clpdmdir	CLPDM Internal/External (0 = Internal, 1 = External)
65	[0]	1	00	clpdmpol	CLPDM External Active Polarity (0 = Low Active, 1 = High Active)
66	[0]	1	01	clpdmspol0	Sequence #0: Start Polarity for CLPDM
67	[5:0]	6	2C	clpdmtog1_0[5:0]	Sequence #0: Toggle Position 1 for CLPDM
68	[5:0]	6	00	clpdmtog1_0[11:6]	
69	[5:0]	6	35	clpdmtog2_0[5:0]	Sequence #0: Toggle Position 2 for CLPDM
6A	[5:0]	6	00	clpdmtog2_0[11:6]	
6B	[0]	1	01	clpdmspol1	Sequence #1: Start Polarity for CLPDM
6C	[5:0]	6	3E	clpdmtog1_1[5:0]	Sequence #1: Toggle Position 1 for CLPDM
6D	[5:0]	6	02	clpdmtog1_1[11:6]	
6E	[5:0]	6	16	clpdmtog2_1[5:0]	Sequence #1: Toggle Position 2 for CLPDM
6F	[5:0]	6	03	clpdmtog2_1[11:6]	
70	[0]	1	00	clpdmspol2	Sequence #2: Start Polarity for CLPDM
71	[5:0]	6	3F	clpdmtog1_2[5:0]	Sequence #2: Toggle Position 1 for CLPDM
72	[5:0]	6	3F	clpdmtog1_2[11:6]	
73	[5:0]	6	3F	clpdmtog2_2[5:0]	Sequence #2: Toggle Position 2 for CLPDM
74	[5:0]	6	3F	clpdmtog2_2[11:6]	
75	[0]	1	01	clpdmspol3	Sequence #3: Start Polarity for CLPDM
76	[5:0]	6	3F	clpdmtog1_3[5:0]	Sequence #3: Toggle Position 1 for CLPDM
77	[5:0]	6	3F	clpdmtog1_3[11:6]	
78	[5:0]	6	3F	clpdmtog2_3[5:0]	Sequence #3: Toggle Position 2 for CLPDM
79	[5:0]	6	3F	clpdmtog2_3[11:6]	
		0	00	clpdmscp0	CLPDM Sequence-Change-Position #0 (Hardcoded to 0)
7A	[1:0]	2	00	clpdmsptr0	CLPDM Sequence Pointer for SCP #0
7B	[5:0]	6	3F	clpdmscp1[5:0]	CLPDM Sequence-Change-Position #1
7C	[5:0]	6	3F	clpdmscp1[11:6]	
7D	[1:0]	2	00	clpdmsptr1	CLPDM Sequence Pointer for SCP #1
7E	[5:0]	6	3F	clpdmscp2[5:0]	CLPDM Sequence-Change-Position #2
7F	[5:0]	6	3F	clpdmscp2[11:6]	
80	[1:0]	2	00	clpdmsptr2	CLPDM Sequence Pointer for SCP #2
81	[5:0]	6	3F	clpdmscp3[5:0]	CLPDM Sequence-Change-Position #3
82	[5:0]	6	3F	clpdmscp3[11:6]	
83	[1:0]	2	00	clpdmsptr3	CLPDM Sequence Pointer for SCP #3

Address	Bit Content	Width	Default Value	Register Name	Register Description
CLPOB # Bits 146					
84	[0]	1	01	clpobdir	CLPOB Internal/External (0 = Internal, 1 = External)
85	[0]	1	00	clpobpol	CLPOB External Active Polarity (0 = Low Active, 1 = High Active)
86	[0]	1	01	clpobpol0	Sequence #0: Start Polarity for CLPOB
87	[5:0]	6	0E	clpobtog1_0[5:0]	Sequence #0: Toggle Position 1 for CLPOB
88	[5:0]	6	00	clpobtog1_0[11:6]	
89	[5:0]	6	2B	clpobtog2_0[5:0]	Sequence #0: Toggle Position 2 for CLPOB
8A	[5:0]	6	00	clpobtog2_0[11:6]	
8B	[0]	1	01	clpobpol1	Sequence #1: Start Polarity for CLPOB
8C	[5:0]	6	2B	clpobtog1_1[5:0]	Sequence #1: Toggle Position 1 for CLPOB
8D	[5:0]	6	06	clpobtog1_1[11:6]	
8E	[5:0]	6	3F	clpobtog2_1[5:0]	Sequence #1: Toggle Position 2 for CLPOB
8F	[5:0]	6	3F	clpobtog2_1[11:6]	
90	[0]	1	00	clpobspol2	Sequence #2: Start Polarity for CLPOB
91	[5:0]	6	3F	clpobtog1_2[5:0]	Sequence #2: Toggle Position 1 for CLPOB
92	[5:0]	6	3F	clpobtog1_2[11:6]	
93	[5:0]	6	3F	clpobtog2_2[5:0]	Sequence #2: Toggle Position 2 for CLPOB
94	[5:0]	6	3F	clpobtog2_2[11:6]	
95	[0]	1	01	clpobspol3	Sequence #3: Start Polarity for CLPOB
96	[5:0]	6	3F	clpobtog1_3[5:0]	Sequence #3: Toggle Position 1 for CLPOB
97	[5:0]	6	3F	clpobtog1_3[11:6]	
98	[5:0]	6	3F	clpobtog2_3[5:0]	Sequence #3: Toggle Position 2 for CLPOB
99	[5:0]	6	3F	clpobtog2_3[11:6]	
		0	00	clpobscp0	CLPOB Sequence-Change-Position #0 (Hardcoded to 0)
9A	[1:0]	2	03	clpobsptr0	CLPOB Sequence Pointer for SCP #0
9B	[5:0]	6	01	clpobscp1[5:0]	CLPOB Sequence-Change-Position #1
9C	[5:0]	6	00	clpobscp1[11:6]	
9D	[1:0]	2	01	clpobsptr1	CLPOB Sequence Pointer for SCP #1
9E	[5:0]	6	02	clpobscp2[5:0]	CLPOB Sequence-Change-Position #2
9F	[5:0]	6	00	clpobscp2[11:6]	
A0	[1:0]	2	00	clpobsptr2	CLPOB Sequence Pointer for SCP #2
A1	[5:0]	6	37	clpobscp3[5:0]	CLPOB Sequence-Change-Position #3
A2	[5:0]	6	03	clpobscp3[11:6]	
A3	[1:0]	2	03	clpobsptr3	CLPOB Sequence Pointer for SCP #3

Address	Bit Content	Width	Default Value	Register Name	Register Description
HBLK # Bits 147					
A4	[0]	1	01	hblkdir	HBLK Internal/External (0 = Internal, 1 = External)
A5	[0]	1	00	hblkpol	HBLK External Active Polarity (0 = Low Active, 1 = High Active)
A6	[0]	1	01	hblkextmask	HBLK External Masking Polarity (0 = Mask H1 and H3 Low, 1 = Mask H1 and H3 High)
A7	[0]	1	01	hblkmask0	Sequence #0: Masking Polarity for HBLK
A8	[5:0]	6	3E	hblktog1_0[5:0]	Sequence #0: Toggle Low Position for HBLK
A9	[5:0]	6	00	hblktog1_0[11:6]	
AA	[5:0]	6	0D	hblkbtog2_0[5:0]	Sequence #0: Toggle High Position for HBLK
AB	[5:0]	6	06	hblkbtog2_0[11:6]	
AC	[0]	1	01	hblkmask1	Sequence #1: Masking Polarity for HBLK
AD	[5:0]	6	38	hblktog1_1[5:0]	Sequence #1: Toggle Low Position for HBLK
AE	[5:0]	6	00	hblktog1_1[11:6]	
AF	[5:0]	6	3C	hblktog2_1[5:0]	Sequence #1: Toggle High Position for HBLK
B0	[5:0]	6	02	hblktog2_1[11:6]	
B1	[0]	1	00	hblkmask2	Sequence #2: Masking Polarity for HBLK
B2	[5:0]	6	3F	hblktog1_2[5:0]	Sequence #2: Toggle Low Position for HBLK
B3	[5:0]	6	3F	hblktog1_2[11:6]	
B4	[5:0]	6	3F	hblktog2_2[5:0]	Sequence #2: Toggle High Position for HBLK
B5	[5:0]	6	3F	hblktog2_2[11:6]	
B6	[0]	1	01	hblkmask3	Sequence #3: Masking Polarity for HBLK
B7	[5:0]	6	3F	hblktog1_3[5:0]	Sequence #3: Toggle Low Position for HBLK
B8	[5:0]	6	3F	hblktog1_3[11:6]	
B9	[5:0]	6	3F	hblktog2_3[5:0]	Sequence #3: Toggle High Position for HBLK
BA	[5:0]	6	3F	hblktog2_3[11:6]	
		0	00	hblkscp0	HBLK Sequence-Change-Position #0 (Hardcoded to 0)
BB	[1:0]	2	00	hblksptr0	HBLK Sequence Pointer for SCP #0
BC	[5:0]	6	3F	hblkscp1[5:0]	HBLK Sequence-Change-Position #1
BD	[5:0]	6	3F	hblkscp1[11:6]	
BE	[1:0]	2	00	hblksptr1	HBLK Sequence Pointer for SCP #1
BF	[5:0]	6	3F	hblkscp2[5:0]	HBLK Sequence-Change-Position #2
C0	[5:0]	6	3F	hblkscp2[11:6]	
C1	[1:0]	2	00	hblksptr2	HBLK Sequence Pointer for SCP #2
C2	[5:0]	6	3F	hblkscp3[5:0]	HBLK Sequence-Change-Position #3
C3	[5:0]	6	3F	hblkscp3[11:6]	
C4	[1:0]	2	00	hblksptr3	HBLK Sequence Pointer for SCP #3

Address	Bit Content	Width	Default Value	Register Name	Register Description
PBLK # Bits 146					
C5	[0]	1	01	pblkdir	PBLK Internal/External (0 = Internal, 1 = External)
C6	[0]	1	00	pblkpol	PBLK External Active Polarity (0 = Low Active, 1 = High Active)
C7	[0]	1	01	pblkspol0	Sequence #0: Start Polarity for PBLK
C8	[5:0]	6	3D	pblktog1_0[5:0]	Sequence #0: Toggle Position 1 for PBLK
C9	[5:0]	6	00	pblktog1_0[11:6]	
CA	[5:0]	6	2A	pblkbtog2_0[5:0]	Sequence #0: Toggle Position 2 for PBLK
CB	[5:0]	6	06	pblkbtog2_0[11:6]	
CC	[0]	1	00	pblkspol1	Sequence #1: Start Polarity for PBLK
CD	[5:0]	6	2A	pblktog1_1[5:0]	Sequence #1: Toggle Position 1 for PBLK
CE	[5:0]	6	06	pblktog1_1[11:6]	
CF	[5:0]	6	3F	pblktog2_1[5:0]	Sequence #1: Toggle Position 2 for PBLK
D0	[5:0]	6	3F	pblktog2_1[11:6]	
D1	[0]	1	00	pblkspol2	Sequence #2: Start Polarity for PBLK
D2	[5:0]	6	3F	pblktog1_2[5:0]	Sequence #2: Toggle Position 1 for PBLK
D3	[5:0]	6	3F	pblktog1_2[11:6]	
D4	[5:0]	6	3F	pblktog2_2[5:0]	Sequence #2: Toggle Position 2 for PBLK
D5	[5:0]	6	3F	pblktog2_2[11:6]	
D6	[0]	1	01	pblkspol3	Sequence #3: Start Polarity for PBLK
D7	[5:0]	6	3F	pblktog1_3[5:0]	Sequence #3: Toggle Position 1 for PBLK
D8	[5:0]	6	3F	pblktog1_3[11:6]	
D9	[5:0]	6	3F	pblktog2_3[5:0]	Sequence #3: Toggle Position 2 for PBLK
DA	[5:0]	6	3F	pblktog2_3[11:6]	
		0	00	pblkscp0	PBLK Sequence-Change-Position #0 (Hardcoded to 0)
DB	[1:0]	2	02	pblksptr0	PBLK Sequence Pointer for SCP #0
DC	[5:0]	6	01	pblkscp1[5:0]	PBLK Sequence-Change-Position #1
DD	[5:0]	6	00	pblkscp1[11:6]	
DE	[1:0]	2	01	pblksptr1	PBLK Sequence Pointer for SCP #1
DF	[5:0]	6	02	pblkscp2[5:0]	PBLK Sequence-Change-Position #2
E0	[5:0]	6	00	pblkscp2[11:6]	
E1	[1:0]	2	00	pblksptr2	PBLK Sequence Pointer for SCP #2
E2	[5:0]	6	37	pblkscp3[5:0]	PBLK Sequence-Change-Position #3
E3	[5:0]	6	03	pblkscp3[11:6]	
E4	[1:0]	2	02	pblksptr3	PBLK Sequence Pointer for SCP #3
H1–H4, RG, SHP, SHD # Bits 53					
E5	[0]	1	00	h1pol	H1/H2 Polarity Control (0 = No Inversion, 1 = Inversion)
E6	[5:0]	6	00	h1posloc	H1 Positive Edge Location
E7	[5:0]	6	20	h1negloc	H1 Negative Edge Location
E8	[2:0]	3	03	h1drv	H1 Drive Strength (0 = OFF, 1 = 3.5 mA, 2 = 7 mA, 3 = 10.5 mA, 4 = 14 mA, 5 = 17.5 mA, 6 = 21 mA, 7 = 24.5 mA)
E9	[2:0]	3	03	h2drv	H2 Drive Strength
EA	[2:0]	3	03	h3drv	H3 Drive Strength
EB	[2:0]	3	03	h4drv	H4 Drive Strength
EC	[0]	1	00	rgpol	RG Polarity Control (0 = No Inversion, 1 = Inversion)
ED	[5:0]	6	00	rgposloc	RG Positive Edge Location
EE	[5:0]	6	10	rgnegloc	RG Negative Edge Location
EF	[2:0]	3	02	rgdrv	RG Drive Strength (0 = OFF, 1 = 3.5 mA, 2 = 7 mA, 3 = 10.5 mA, 4 = 14 mA, 5 = 17.5 mA, 6 = 21 mA, 7 = 24.5 mA)
F0	[5:0]	6	24	shpposloc	SHP (Positive) Edge Sampling Location
F1	[5:0]	6	00	shdposloc	SHD (Positive) Edge Sampling Location

Address	Bit Content	Width	Default Value	Register Name	Register Description
AFE REGISTER BREAKDOWN					
oprmode	**[7:0]**		**8'h0**		**Serial Address: 8'h00 {oprmode[5:0]}, 8'h01 {oprmode[7:6]}**
	[1:0]	2'h0		powerdown[1:0]	Full Power
		2'h1			Fast Recovery
		2'h2			Reference Standby
		2'h3			Total Shutdown
	[2]			disblack	Disable Black Loop Clamping (High Active)
	[3]			test mode	Test Mode—Should Be Set LOW
	[4]			test mode	Test Mode—Should Be Set HIGH
	[5]			test mode	Test Mode—Should Be Set LOW
	[6]			test mode	Test Mode—Should Be Set LOW
	[7]			test mode	Test Mode—Should Be Set LOW
ctlmode	**[5:0]**		**6'h0**		**Serial Address: 8'h06 {cltmode[5:0]}**
	[2:0]	3'h0		ctlmode[2:0]	Off
		3'h1			Mosaic Separate
		3'h2			VD Selected/Mosaic Interlaced
		3'h3			Mosaic Repeat
		3'h4			Three-Color
		3'h5			Three-Color II
		3'h6			Four-Color
		3'h7			Four-Color II
	[3]			enablepxga	Enable *PxGA* (High Active)
	[4]	1'h0		outputlat	Latch Output Data on Selected DOUT Edge
		1'h1			Leave Output Latch Transparent
	[5]	1'h0		tristateout	ADC Outputs Are Driven
		1'h1			ADC Outputs Are Three-Stated

PRECISION TIMING HIGH SPEED TIMING GENERATION

The AD9848 and AD9849 generate flexible high speed timing signals using the *Precision Timing* core. This core is the foundation for generating the timing used for both the CCD and the AFE; the reset gate RG, horizontal drivers H1–H4, and the SHP/SHD sample clocks. A unique architecture makes it routine for the system designer to optimize image quality by providing precise control over the horizontal CCD readout and the AFE correlated double sampling.

Timing Resolution

The *Precision Timing* core uses a 1× master clock input (CLI) as a reference. This clock should be the same as the CCD pixel clock frequency. Figure 4 illustrates how the internal timing core divides the master clock period into 48 steps or edge positions. Therefore, the edge resolution of the *Precision Timing* core is (t_{CLI}/48). For more information on using the CLI input, see the Driving the CLI Input section.

High Speed Clock Programmability

Figure 5 shows how the high speed clocks RG, H1–H4, SHP, and SHD are generated. The RG pulse has programmable rising and falling edges and may be inverted using the polarity control. The horizontal clocks H1 and H3 have programmable rising and falling edges and polarity control. The H2 and H4 clocks are always inverses of H1 and H3, respectively. Table II summarizes the high speed timing registers and their parameters.

The edge location registers are six bits wide, but there are only 48 valid edge locations available. Therefore, the register values are mapped into four quadrants, with each quadrant containing 12 edge locations. Table III shows the correct register values for the corresponding edge locations. Figure 6 shows the range and default locations of the high speed clock signals.

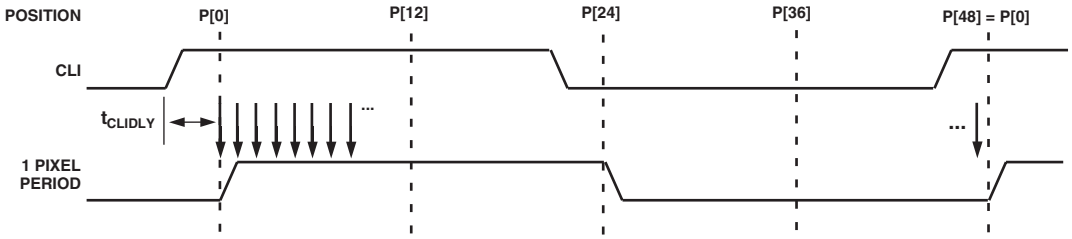

NOTES
1. PIXEL CLOCK PERIOD IS DIVIDED INTO 48 POSITIONS, PROVIDING FINE EDGE RESOLUTION FOR HIGH SPEED CLOCKS.
2. THERE IS A FIXED DELAY FROM THE CLI INPUT TO THE INTERNAL PIXEL PERIOD POSITIONS (t_{CLIDLY} = 6 ns TYP).

Figure 4. High Speed Clock Resolution from CLI Master Clock Input

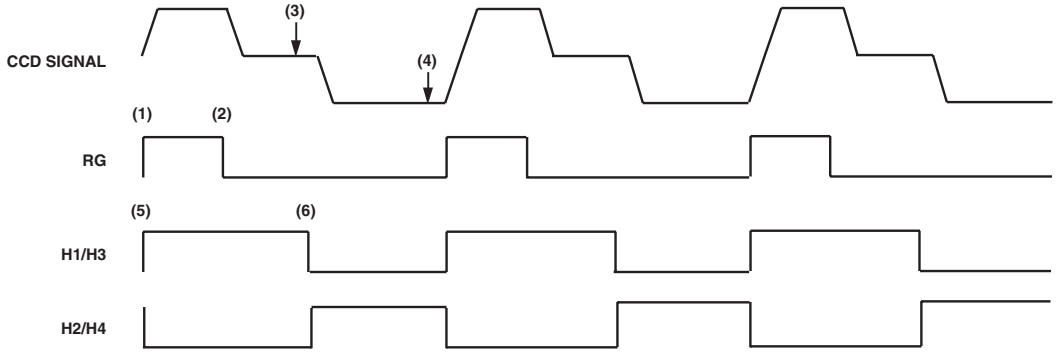

NOTES
PROGRAMMABLE CLOCK POSITIONS:
(1) RG RISING EDGE AND (2) FALLING EDGE
(3) SHP AND (4) SHD SAMPLE LOCATION
(5) H1/H3 RISING EDGE POSITION AND (6) FALLING EDGE POSITION (H2/H4 ARE INVERSE OF H1/H3)

Figure 5. High Speed Clock Programmable Locations

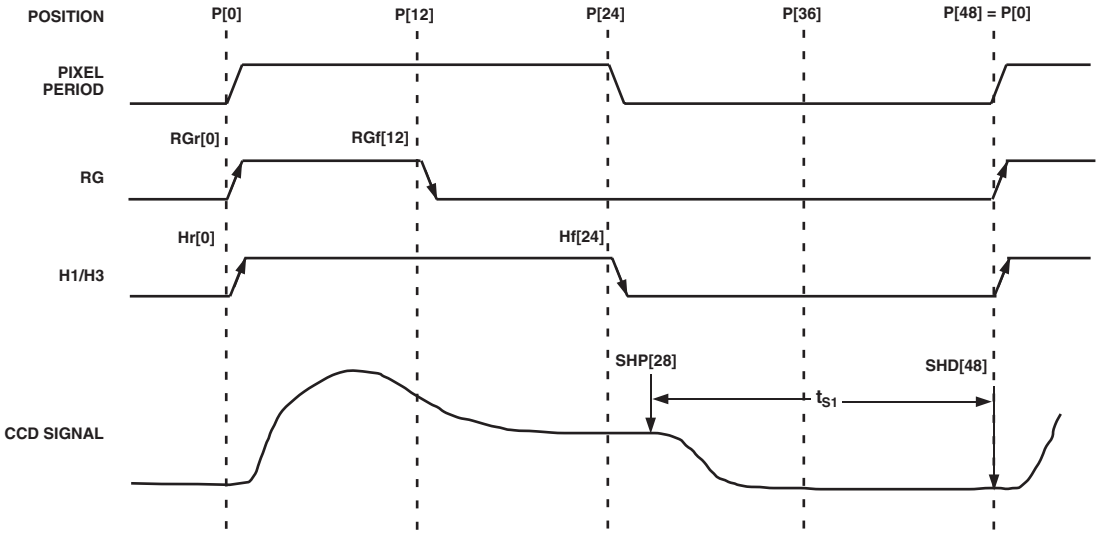

NOTES
1. ALL SIGNAL EDGES ARE FULLY PROGRAMMABLE TO ANY OF THE 48 POSITIONS WITHIN ONE PIXEL PERIOD.
2. DEFAULT POSITIONS FOR EACH SIGNAL ARE SHOWN ABOVE.

Figure 6. High Speed Clock Default and Programmable Locations

Table II. H1–H4, RG, SHP, SHD Timing Parameters

Register Name	Length	Range	Description
POL	1b	High/Low	Polarity Control for H1, H3, and RG (0 = No Inversion, 1 = Inversion)
POSLOC	6b	0–47 Edge Location	Positive Edge Location for H1, H3, and RG Sample Location for SHP, SHD
NEGLOC	6b	0–47 Edge Location	Negative Edge Location for H1, H3, and RG
DRV	3b	0–7 Current Steps	Drive Current for H1–H4 and RG Outputs (3.5 mA per Step)

Table III. *Precision Timing* Edge Locations

Quadrant	Edge Location (Decimal)	Register Value (Decimal)	Register Value (Binary)
I	0 to 11	0 to 11	000000 to 001011
II	12 to 23	16 to 27	010000 to 011011
III	24 to 35	32 to 43	100000 to 101011
IV	36 to 47	48 to 59	110000 to 111011

H-Driver and RG Outputs

In addition to the programmable timing positions, the AD9848/AD9849 features on-chip output drivers for the RG and H1–H4 outputs. These drivers are powerful enough to directly drive the CCD inputs. The H-driver current can be adjusted for optimum rise/fall time into a particular load by using the DRV registers. The RG drive current is adjustable using the RGDRV register. Each 3-bit DRV register is adjustable in 3.5 mA increments, with the minimum setting of 0 equal to OFF or three-state, and the maximum setting of 7 equal to 24.5 mA.

As shown in Figure 7, the H2/H4 outputs are inverses of H1/H3. The internal propagation delay resulting from the signal inversion is less than l ns, which is significantly less than the typical rise time driving the CCD load. This results in a H1/H2 crossover voltage at approximately 50% of the output swing. The crossover voltage is not programmable.

Digital Data Outputs

The AD9848/AD9849 data output phase is programmable using the DOUTPHASE register. Any edge from 0 to 47 may be programmed, as shown in Figure 8.

HORIZONTAL CLAMPING AND BLANKING

The AD9848/AD9849's horizontal clamping and blanking pulses are fully programmable to suit a variety of applications. As with the vertical timing generation, individual sequences are defined for each signal and are then organized into multiple regions during image readout. This allows the dark pixel clamping and blanking patterns to be changed at each stage of the readout to accommodate different image transfer timing and high speed line shifts.

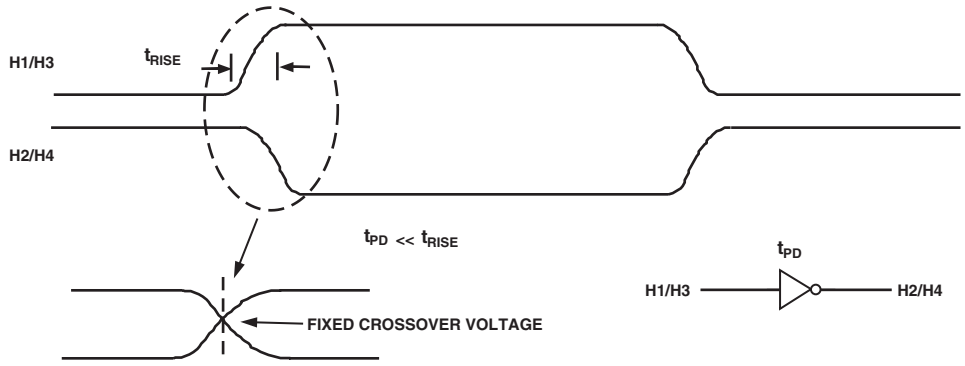

Figure 7. H-Clock Inverse Phase Relationship

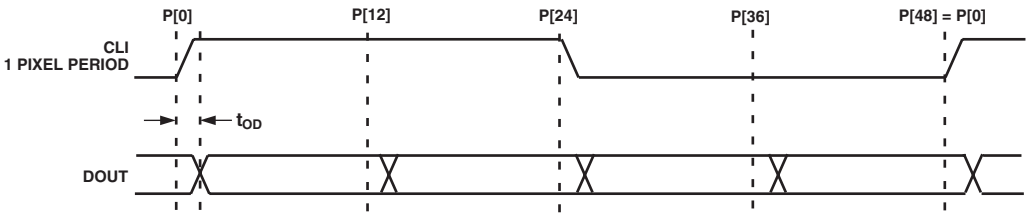

NOTES
1. DIGITAL OUTPUT DATA (DOUT) PHASE IS ADJUSTABLE WITH RESPECT TO THE PIXEL PERIOD.
2. WITHIN 1 CLOCK PERIOD, THE DATA TRANSITION CAN BE PROGRAMMED TO ANY OF THE 48 LOCATIONS.

Figure 8. Digital Output Phase Adjustment

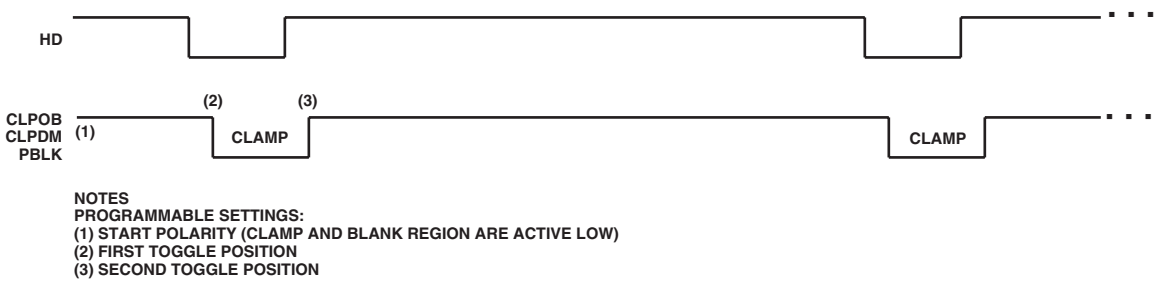

Figure 9. Clamp and Preblank Pulse Placement

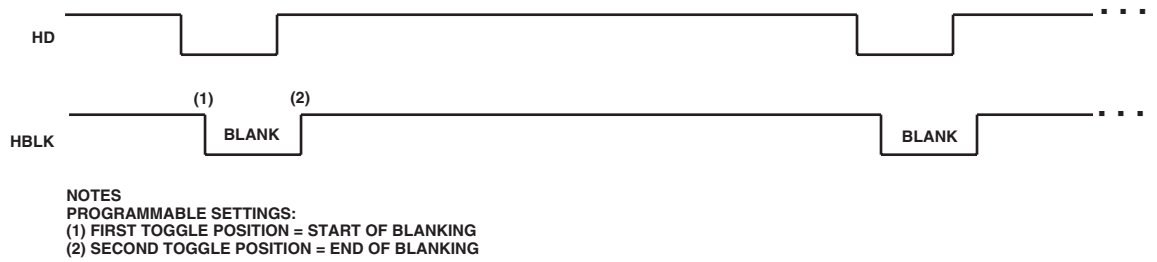

Figure 10. Horizontal Blanking (HBLK) Pulse Placement

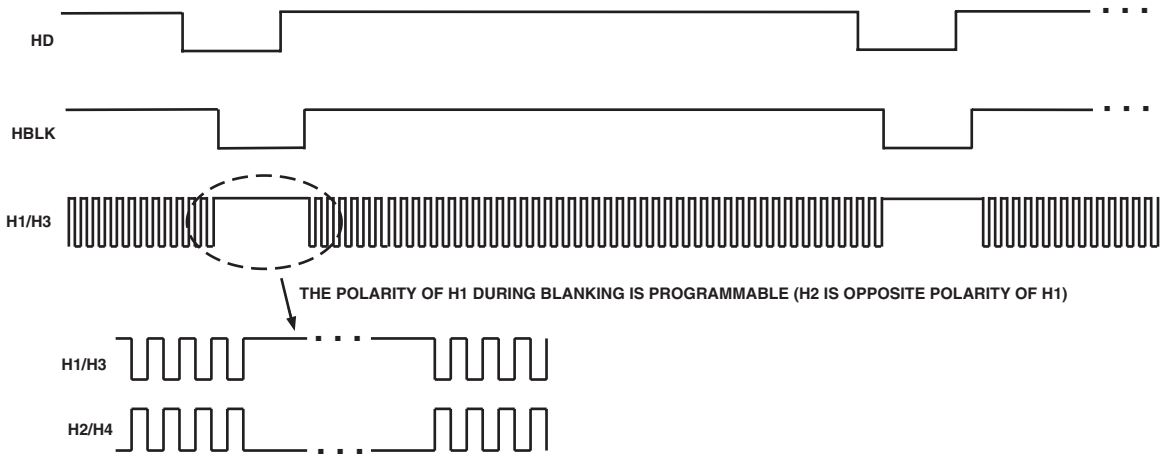

Figure 11. HBLK Masking Control

Individual CLPOB, CLPDM, PBLK Sequences

The AFE horizontal timing consists of CLPOB, CLPDM, and PBLK, as shown in Figure 9. These three signals are independently programmed using the registers in Table IV. SPOL is the start polarity for the signal, and TOG1 and TOG2 are the first and second toggle positions of the pulse. All three signals are active low and should be programmed accordingly. Up to four individual sequences can be created for each signal.

Individual HBLK Sequences

The HBLK programmable timing shown in Figure 10 is similar to CLPOB, CLPDM, and PBLK. However, there is no start polarity control. Only the toggle positions are used to designate the start and the stop positions of the blanking period. Additionally, there is a polarity control HBLKMASK that designates the polarity of the horizontal clock signals H1–H4 during the blanking period. Setting HBLKMASK high will set H1 = H3 = low and H2 = H4 = high during the blanking, as shown in Figure 11. Up to four individual sequences are available for HBLK.

Horizontal Sequence Control

The AD9848/AD9849 uses Sequence Change Positions (SCP) and Sequence Pointers (SPTR) to organize the individual horizontal sequences. Up to four SCPs are available to divide the readout into four separate regions, as shown in Figure 12. The SCP 0 is always hard-coded to line 0, and SCP1–3 are register programmable. During each region bounded by the SCP, the SPTR registers designate which sequence is used by each signal. CLPOB, CLPDM, PBLK, and HBLK each have a separate set of SCP. For example, CLPOBSCP1 will define Region 0 for CLPOB, and in that region any of the four individual CLPOB sequences may be selected with the CLPOBSPTR registers. The next SCP defines a new region and in that region each signal can be assigned to a different individual sequence. The Sequence Control Registers are summarized in Table VI.

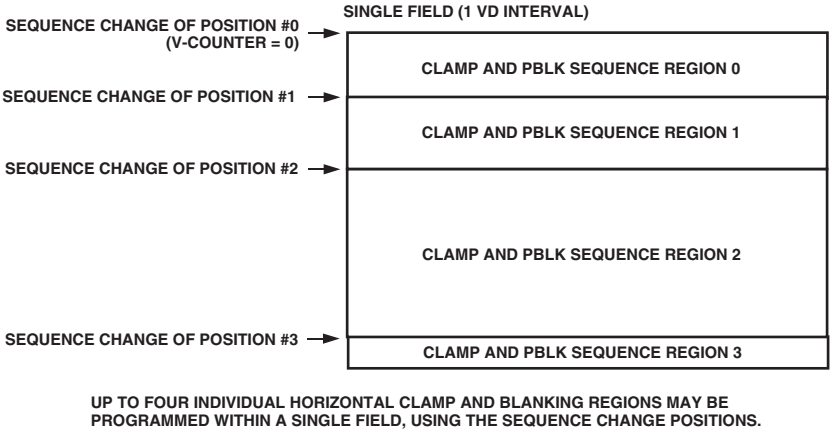

Figure 12. Clamp and Blanking Sequence Flexibility

Table IV. CLPOB, CLPDM, PBLK Individual Sequence Parameters

Register Name	Length	Range	Description
SPOL	1b	High/Low	Starting Polarity of Clamp and Blanking Pulses for Sequences 0–3
TOG1	12b	0–4095 Pixel Location	First Toggle Position within the Line for Sequences 0–3
TOG2	12b	0–4095 Pixel Location	Second Toggle Position within the Line for Sequences 0–3

Table V. HBLK Individual Sequence Parameters

Register Name	Length	Range	Description
HBLKMASK	1b	High/Low	Masking Polarity for H1 for Sequences 0–3 (0 = H1 Low, 1 = H1 High)
HBLKTOG1	12b	0–4095 Pixel Location	First Toggle Position within the Line for Sequences 0–3
HBLKTOG2	12b	0–4095 Pixel Location	Second Toggle Position within the Line for Sequences 0–3

Table VI. Horizontal Sequence Control Parameters for CLPOB, CLPDM, PBLK, and HBLK

Register Name	Length	Range	Description
SCP1–SCP3	12b	0–4095 Line Number	CLAMP/BLANK SCP to Define Horizontal Regions 0–3
SPTR0–SPTR3	2b	0–3 Sequence Number	Sequence Pointer for Horizontal Regions 0–3

H-Counter Synchronization

The H-Counter reset occurs on the sixth CLI rising edge following the HD falling edge. The *PxGA* steering is synchronized with the reset of the internal H-Counter (see Figure 13).

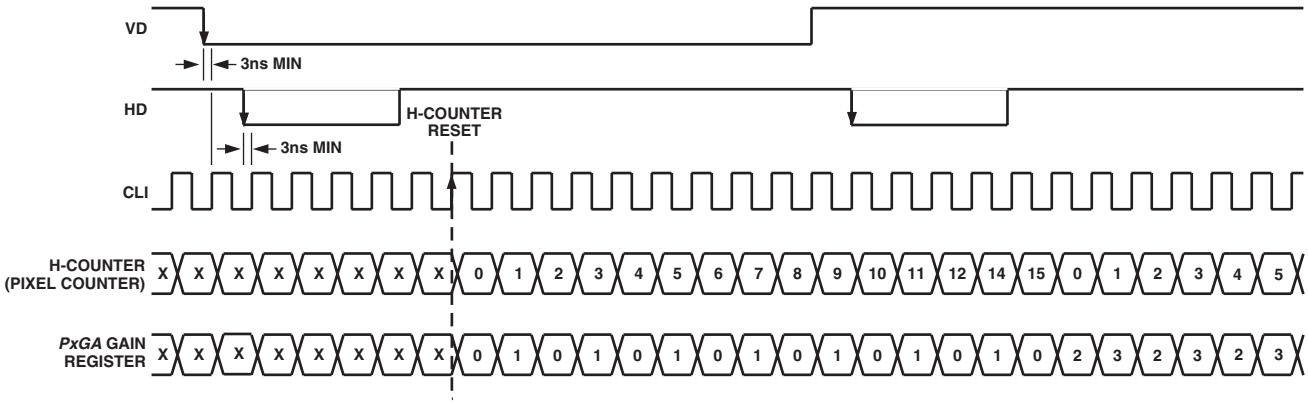

NOTES
1. INTERNAL H-COUNTER IS RESET ON THE SIXTH CLI RISING EDGE FOLLOWING THE HD FALLING EDGE.
2. *PxGA* STEERING IS SYNCRONIZED WITH THE RESET OF THE INTERNAL H-COUNTER (MOSAIC SEPARATE MODE IS SHOWN).
3. VD FALLING EDGE SHOULD OCCUR ONE CLOCK CYCLE BEFORE HD FALLING EDGE FOR PROPER *PxGA* LINE SYNCHRONIZATION.

Figure 13. H-Counter Synchronization

POWER-UP PROCEDURE

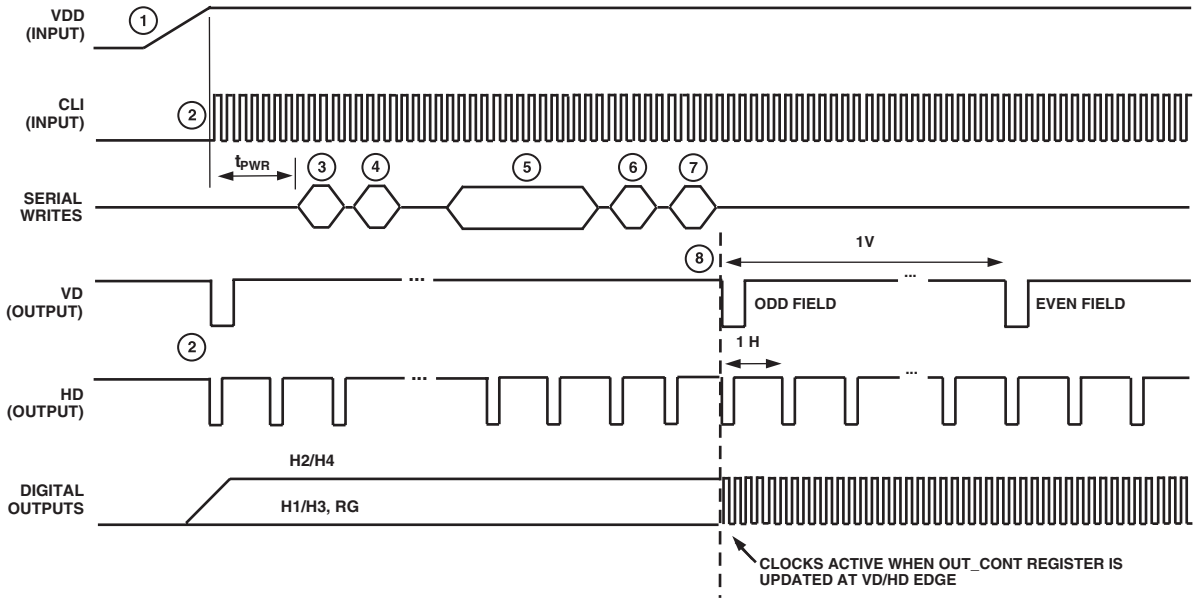

Figure 14. Recommended Power-Up Sequence

Recommended Power-Up Sequence

When the AD9848 and AD9849 are powered up, the following sequence is recommended (refer to Figure 14 for each step).

1. Turn on power supplies for AD9848/AD9849.
2. Apply the master clock input CLI, VD, and HD.
3. The *Precision Timing* core must be reset by writing a "0" to the TGCORE_RSTB Register (Address x026) followed by writing a "l" to the TGCORE_RSTB Register. This will start the internal timing core operation. Next, initialize the internal circuitry by first writing "110101" or "53" decimal to the INITIAL1 Register (Address x020). Finally, write "000100" or "4" decimal to the INITIAL2 Register (Address x00F).
4. Write a "1" to the PREVENTUPDATE Register (Address x019). This will prevent the updating of the serial register data.
5. Write to desired registers to configure high speed timing and horizontal timing.
6. Write a "1" to the OUT_CONT Register (Address x016). This will allow the outputs to become active after the next VD/HD rising edge.
7. Write a "0" to the PREVENTUPDATE Register (Address x019). This will allow the serial information to be updated at next VD/HD falling edge.
8. The next VD/HD falling edge allows register updates to occur, including OUT_CONT, which enables all clock outputs.

ANALOG FRONT END DESCRIPTION AND OPERATION

The AD9848/AD9849 signal processing chain is shown in Figure 15. Each processing step is essential in achieving a high quality image from the raw CCD pixel data.

DC Restore

To reduce the large dc offset of the CCD output signal, a dc restore circuit is used with an external 0.1 µF series coupling capacitor. This restores the dc level of the CCD signal to approximately 1.5 V to be compatible with the 3 V analog supply signal of the AD9848/AD9849.

Correlated Double Sampler

The CDS circuit samples each CCD pixel twice to extract the video information and reject low frequency noise. The timing shown in Figure 6 illustrates how the two internally generated CDS clocks, SHP and SHD, are used to sample the reference level and data level of the CCD signal, respectively. The placement of the SHP and SHD sampling edges is determined by the setting of the SHPPOSLOC and SHDPOSLOC Registers located at Address 0xF0 and 0xF1, respectively. Placement of these two clock signals is critical to achieve the best performance from the CCD.

Input Clamp

A line-rate input clamping circuit removes the CCD's optical black offset. This offset exists in the CCD's shielded black reference pixels. The AD9848/AD9849 removes this offset in the input stage to minimize the effect of a gain change on the system black level, usually called the "gain step." Another advantage of removing this offset at the input stage is to maximize system headroom. Some area CCDs have large black level offset voltages that can significantly reduce the available headroom in the internal circuitry when higher VGA gain settings are used, if not corrected after the input stage.

Horizontal timing examples are shown on the last page of the Applications Information section. It is recommended that the CLPDM pulse be used during valid CCD dark pixels. CLPDM may be used during the optical black pixels, either together with CLPOB or separately. The CLPDM pulse should be a minimum of four pixels wide.

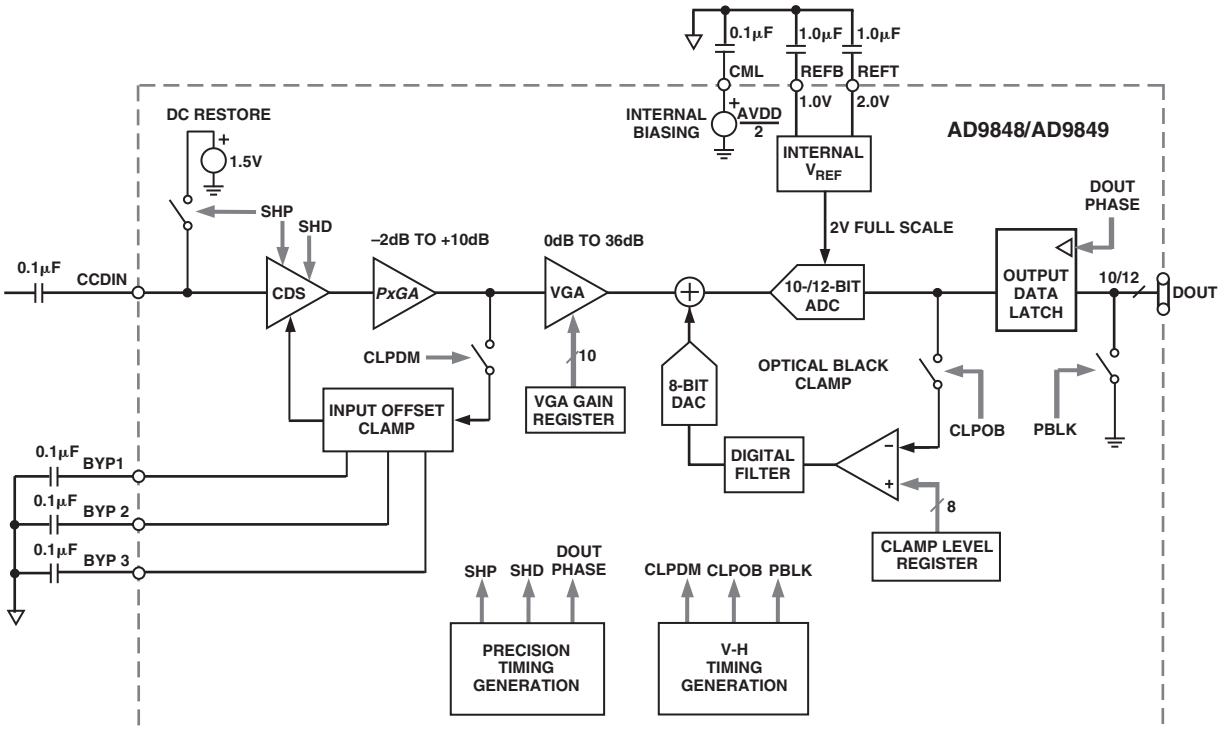

Figure 15. Analog Front End Block Diagram

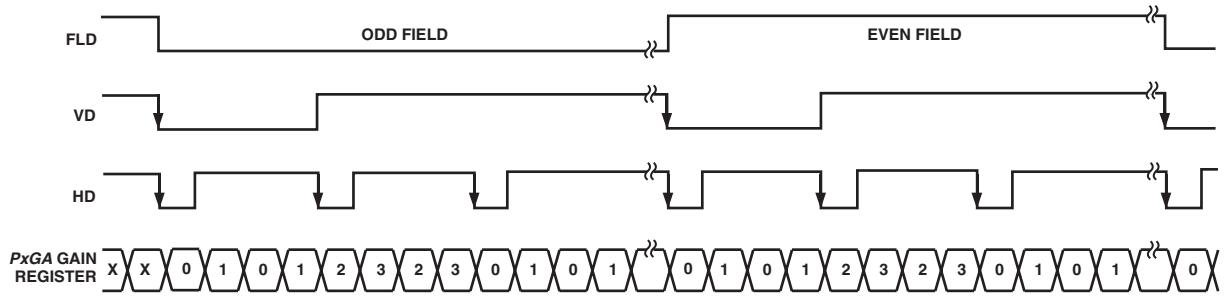

NOTES
1. VD FALLING EDGE WILL RESET THE *PxGA* GAIN REGISTER STEERING TO "0101" LINE.
2. HD FALLING EDGES WILL ALTERNATE THE *PxGA* GAIN REGISTER STEERING BETWEEN "0101" AND "2323" LINES.
3. FLD STATUS IS IGNORED.

Figure 16a. Mosaic Separate Mode

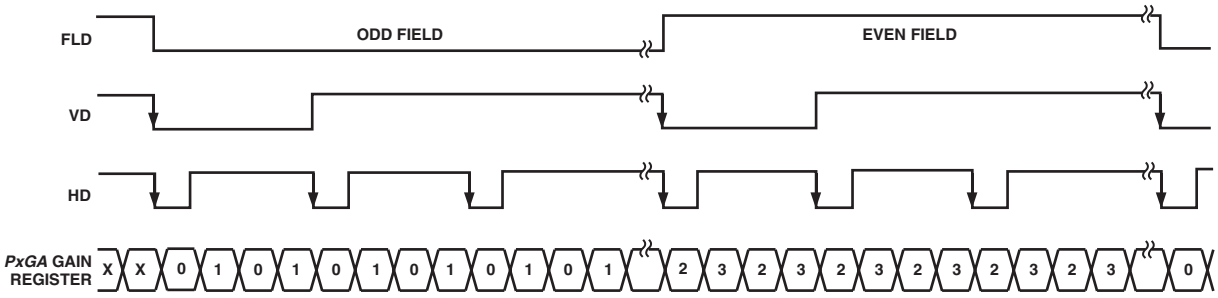

NOTES
1. FLD FALLING EDGE (START OF ODD FIELD) WILL RESET THE *PxGA* GAIN REGISTER STEERING TO "0101" LINE.
2. FLD RISING EDGE (START OF EVEN FIELD) WILL RESET THE *PxGA* GAIN REGISTER STEERING TO "2323" LINE.
3. HD FALLING EDGES WILL RESET THE *PxGA* GAIN REGISTER STEERING TO EITHER "0" (FLD = ODD) OR "2" (FLD = EVEN).

Figure 16b. Mosaic Interlaced Mode

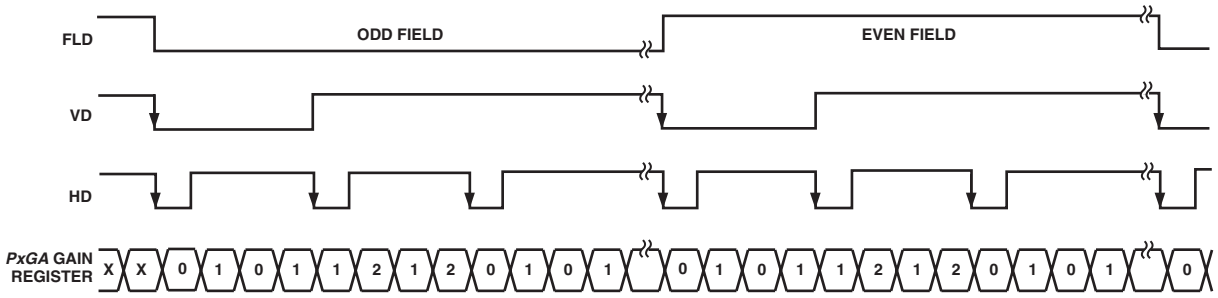

NOTES
1. VD FALLING EDGE WILL RESET THE *PxGA* GAIN REGISTER STEERING TO "0101" LINE.
2. HD FALLING EDGES WILL ALTERNATE THE *PxGA* GAIN REGISTER STEERING BETWEEN "0101" AND "1212" LINES.
3. ALL FIELDS WILL HAVE THE SAME *PxGA* GAIN STEERING PATTERN (FLD STATUS IS IGNORED).

Figure 16c. Mosaic Repeat Mode

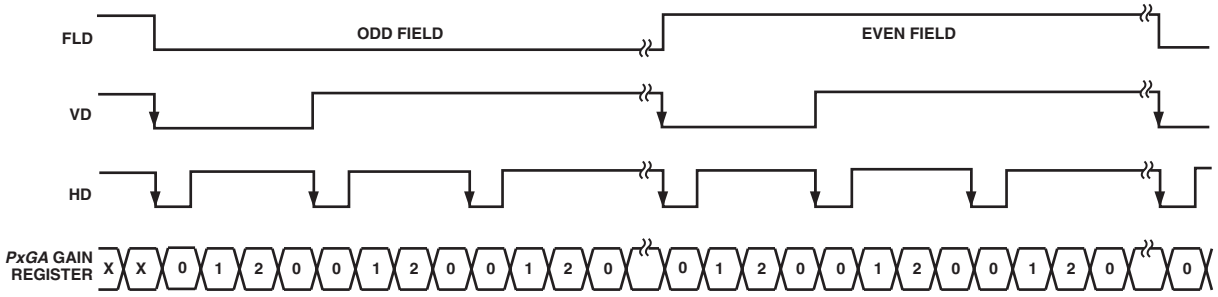

NOTES
1. EACH LINE FOLLOWS "012012" STEERING PATTERN.
2. VD AND HD FALLING EDGES WILL RESET THE *PxGA* GAIN REGISTER STEERING TO "0."
3. FLD STATUS IS IGNORED.

Figure 16d. Three-Color Mode

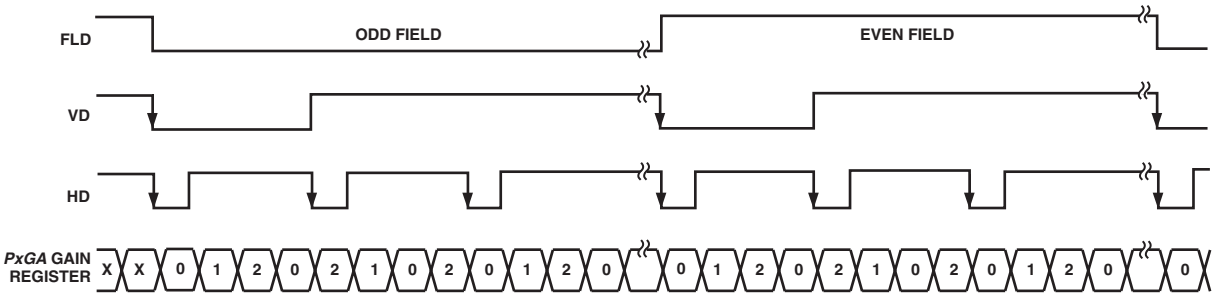

NOTES
1. VD FALLING EDGE WILL RESET THE *PxGA* GAIN REGISTER STEERING TO "012012" LINE.
2. HD FALLING EDGES WILL ALTERNATE THE *PxGA* GAIN REGISTER STEERING BETWEEN "012012" AND "210210" LINES.
3. FLD STATUS IS IGNORED.

Figure 16e. Three-Color Mode II

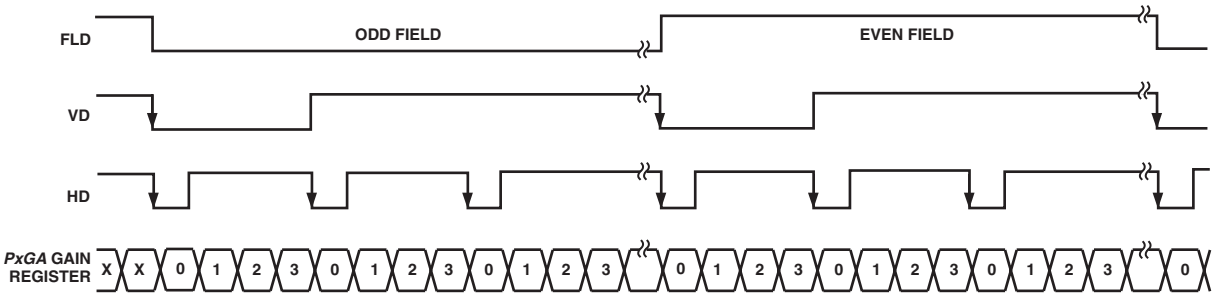

NOTES
1. EACH LINE FOLLOWS "01230123" STEERING PATTERN.
2. VD AND HD FALLING EDGES WILL RESET THE *PxGA* GAIN REGISTER STEERING TO GAIN REGISTER "0."
3. FLD STATUS IS IGNORED.

Figure 16f. Four-Color Mode

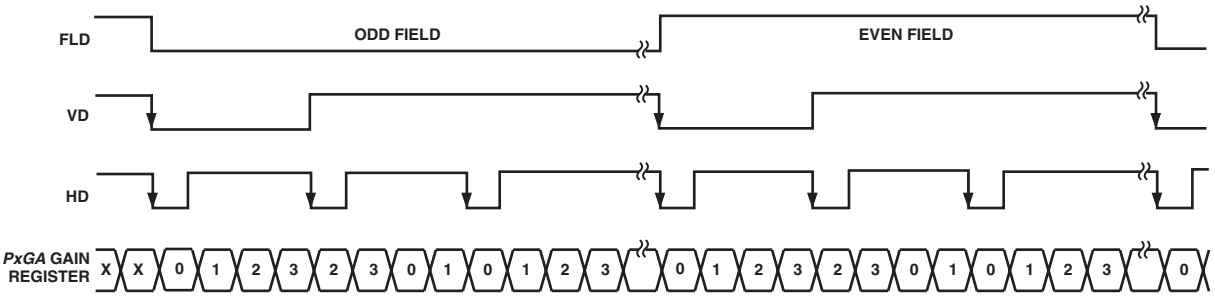

NOTES
1. VD FALLING EDGE WILL RESET THE *PxGA* GAIN REGISTER STEERING TO "01230123" LINE.
2. HD FALLING EDGES WILL ALTERNATE THE *PxGA* GAIN REGISTER STEERING BETWEEN "01230123" AND "23012301" LINES.
3. FLD STATUS IS IGNORED.

Figure 16g. Four-Color Mode II

PxGA

The *PxGA* provides separate gain adjustment for the individual color pixels. A programmable gain amplifier with four separate values, the *PxGA* has the capability to "multiplex" its gain value on a pixel-to-pixel basis (see Figure 17). This allows lower output color pixels to be gained up to match higher output color pixels. Also, the *PxGA* may be used to adjust the colors for white balance, reducing the amount of digital processing that is needed. The four different gain values are switched according to the "Color Steering" circuitry. Seven different color steering modes for different types of CCD color filter arrays are programmed in the AD9848/AD9849 AFE Register, ctlmode, at Address 0x06 (see Figures 16a to 16g for timing examples). For example, Mosaic Separate steering mode accommodates the popular "Bayer" arrangement of Red, Green, and Blue filters (see Figures 18a and 18b).

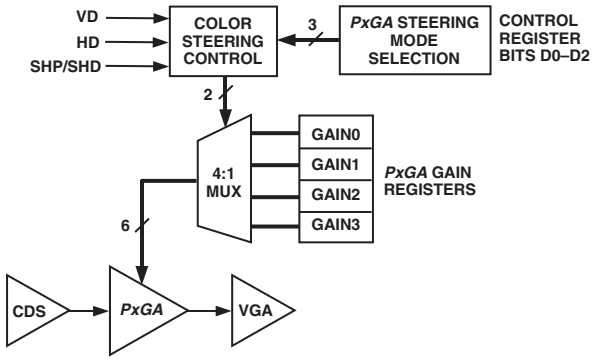

Figure 17. PxGA Block Diagram

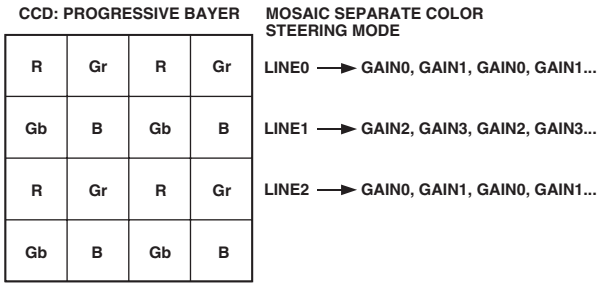

Figure 18a. CCD Color Filter Example: Progressive Scan

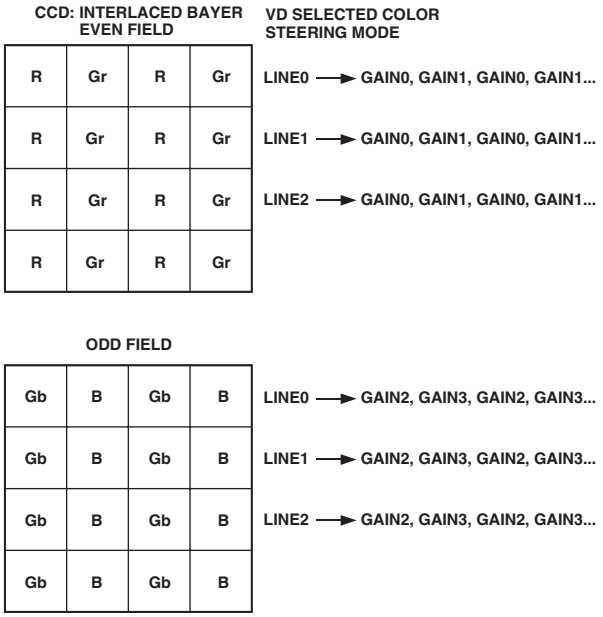

Figure 18b. CCD Color Filter Example: Interlaced

The same Bayer pattern can also be interlaced, and the VD selected mode should be used with this type of CCD (see Figure 18b). The Color Steering performs the proper multiplexing of the R, G, and B gain values (loaded into the *PxGA* gain registers) and is synchronized by the user with vertical (VD) and horizontal (HD) sync pulses. For more detailed information, see the *PxGA* Timing section. The *PxGA* gain for each of the four channels is variable from –2 dB to +10 dB, controlled in 64 steps through the serial interface. The *PxGA* gain curve is shown in Figure 19.

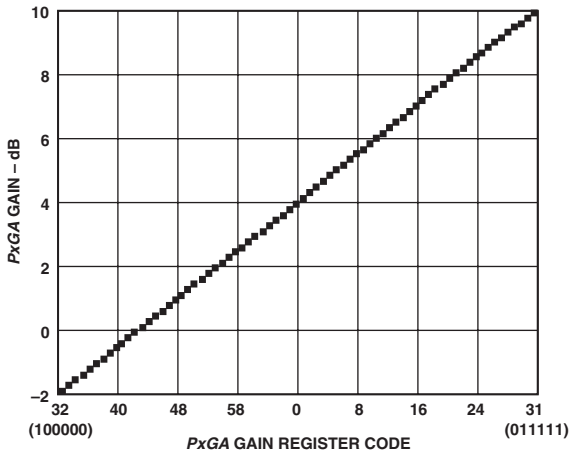

Figure 19. PxGA Gain Curve

Variable Gain Amplifier

The VGA stage provides a gain range of 2 dB to 36 dB, programmable with 10-bit resolution through the serial digital interface. Combined with 4 dB from the *PxGA* stage, the total gain range for the AD9848/AD9849 is 6 dB to 40 dB. The minimum gain of 6 dB is needed to match a 1 V input signal with the ADC full-scale range of 2 V. When compared to 1 V full-scale systems (such as ADI's AD9803), the equivalent gain range is 0 dB to 34 dB.

The VGA gain curve is divided into two separate regions. When the VGA Gain Register code is between 0 and 511, the curve follows a (1 + x)/(1 – x) shape, which is similar to a "linear-in-dB" characteristic. From code 512 to code 1023, the curve follows a "linear-in-dB" shape. The exact VGA gain can be calculated for any Gain Register value by using the following two equations:

Code Range	Gain Equation (dB)
0–511	$Gain = 20 \log_{10}([658 + code]/[658 - code]) - 0.4$
512–1023	$Gain = (0.0354)(code) - 0.04$

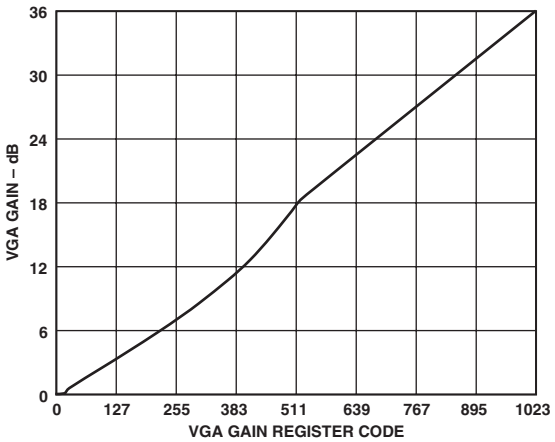

Figure 20. VGA Gain Curve (Gain from PxGA Not Included)

Optical Black Clamp

The optical black clamp loop removes residual offsets in the signal chain to track low frequency variations in the CCD's black level. During the optical black (shielded) pixel interval on each line, the ADC output is compared with a fixed black level reference, selected by the user in the Clamp Level Register. The value can be programmed between 0 LSB and 63.75 LSB on the AD9848 and between 0 LSB and 255 LSB on the AD9849. The clamp level can be programmed with 8-bit resolution. The resulting error signal is filtered to reduce noise, and the correction value is applied to the ADC input through a D/A converter. Normally, the optical black clamp loop is turned on once per horizontal line, but this loop can be updated more slowly to suit a particular application. If external digital clamping is used during the post processing, the AD9848/AD9849 optical black clamping may be disabled using Bit D2 in the OPRMODE Register. When the loop is disabled, the Clamp Level Register may still be used to provide programmable offset adjustment.

The CLPOB pulse should be placed during the CCD's optical black pixels. It is recommended that the CLPOB pulse duration be at least 20 pixels wide to minimize clamp noise. Shorter pulse-widths may be used, but clamp noise may increase, and the ability to track low frequency variations in the black level will be reduced. See the section on Horizontal Clamping and Blanking and also the Applications Information section for timing examples.

A/D Converter

The AD9848/AD9849 uses high performance 10-bit/12-bit ADC architecture, optimized for high speed and low power. Differential Nonlinearity (DNL) performance is typically better than 0.5 LSB. The ADC uses a 2 V input range. Better noise performance results from using a larger ADC full-scale range. See TPC 1 to TPC 4 for typical linearity and noise performance plots for the AD9848/AD9849.

APPLICATIONS INFORMATION

External Circuit Configuration

The AD9848/AD9849 recommended circuit configuration for External Mode is shown in Figure 21. All signals should be carefully routed on the PCB to maintain low noise performance. The CCD output signal should be connected to Pin 29 through a 0.1 µF capacitor. The CCD timing signals H1–H4 and RG should be routed directly to the CCD with minimum trace lengths, as shown in Figures 22a and 22b. The digital outputs and clock inputs are located on Pins 1–12 and Pins 36–48 and should be connected to the digital ASIC, away from the analog and CCD clock signals. The CLI signal from the ASIC may be routed under the package to Pin 23. This will help separate the CLI signal from the H1–H4 and RG signal routing.

Grounding and Decoupling Recommendations

As shown in Figure 21, a single ground plane is recommended for the AD9848/AD9849. This ground plane should be as continuous as possible, particularly around Pins 25–35. This will ensure that all analog decoupling capacitors provide the lowest possible impedance path between the power and bypass pins and their respective ground pins. All decoupling capacitors should be located as close as possible to the package pins. Placing series resistors close to the digital output pins (Pins 1–12, 47–48) may help reduce digital code transition noise. If the digital outputs must drive a load larger than 20 pF, buffering is recommended to minimize additional noise.

Power supply decoupling is very important for low noise performance. Figure 21 shows the local high frequency decoupling capacitors, but additional capacitance is recommended for lower frequencies. Additional capacitors and ferrite beads can further reduce noise.

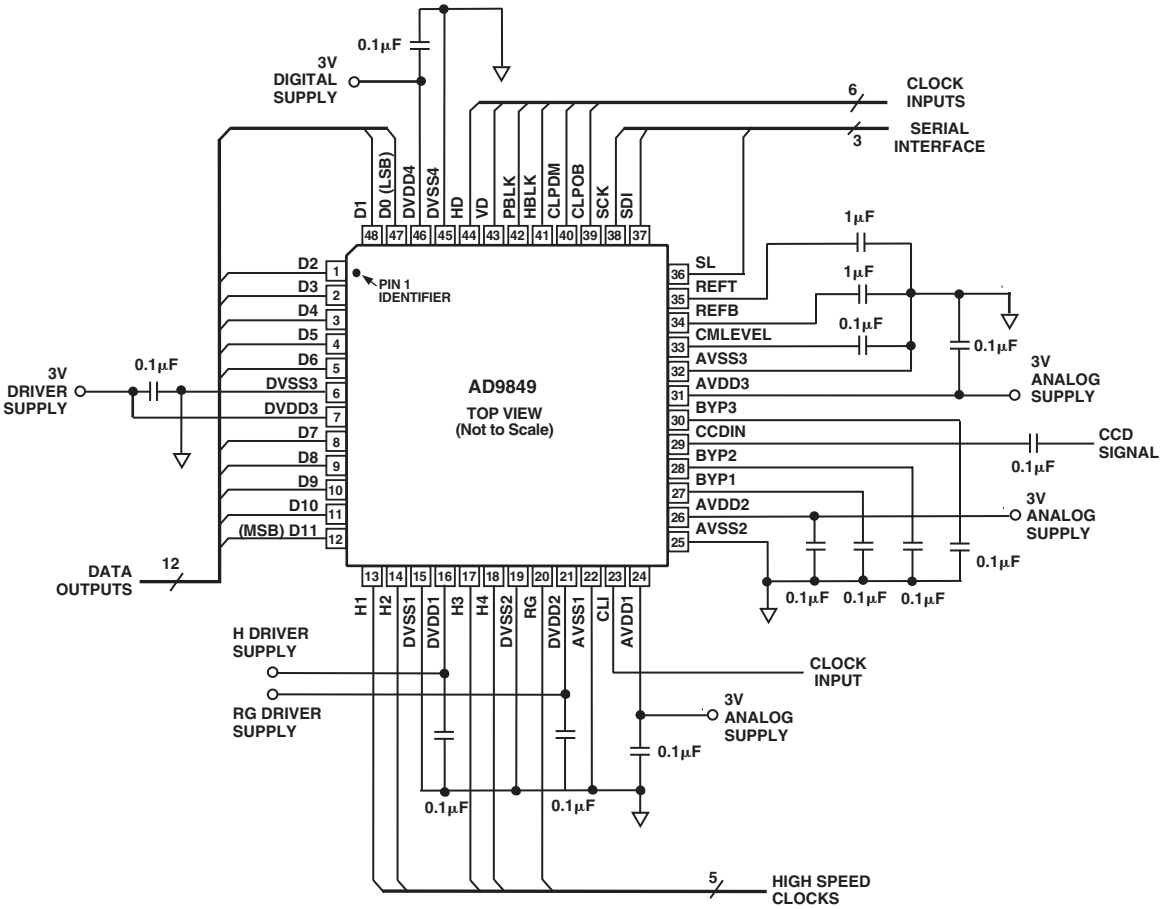

Figure 21. Recommend Circuit Configuration for External Mode

Driving the CLI Input

The AD9848/AD9849's master clock input (CLI) may be used in two different configurations, depending on the application. Figure 23a shows a typical dc-coupled input from the master clock source. When the dc-coupled technique is used, the master clock signal should be at standard 3 V CMOS logic levels. As shown in Figure 23b, a 1000 pF ac-coupling capacitor may be used between the clock source and the CLI input. In this configuration, the CLI input will self-bias to the proper dc voltage level of approximately 1.4 V. When the ac-coupled technique is used, the master clock signal can be as low as ±500 mV in amplitude.

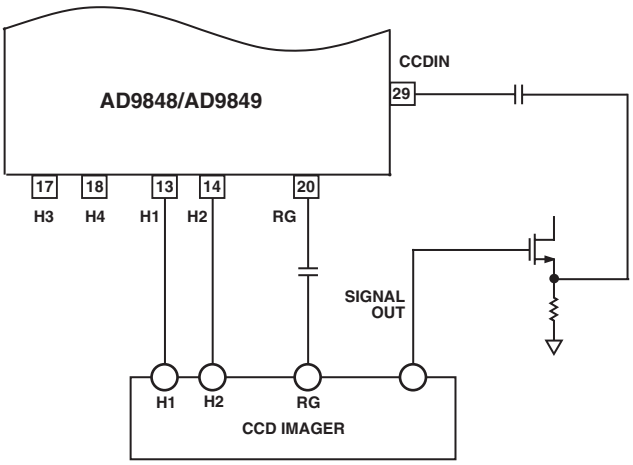

Figure 22a. CCD Connections (2 H-Clock)

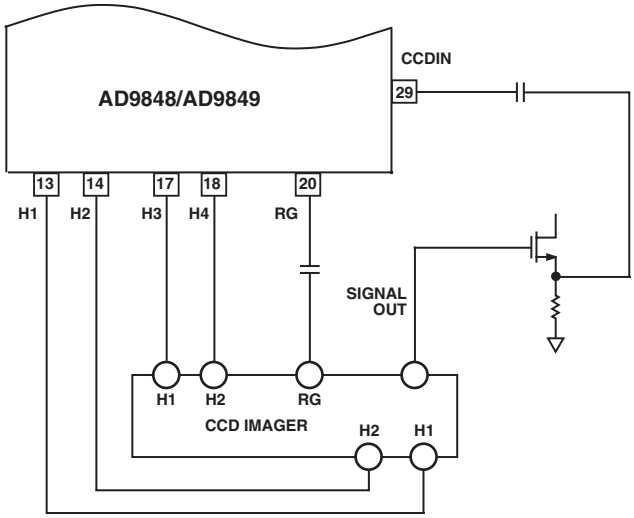

Figure 22b. CCD Connections (4 H-Clock)

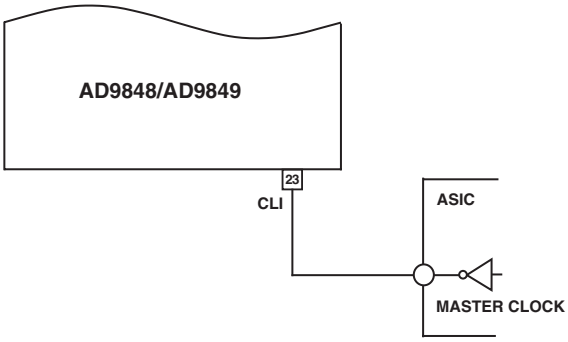

Figure 23a. CLI Connection, DC-Coupled

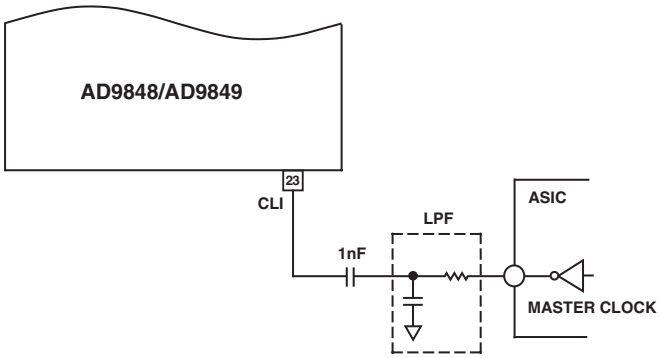

Figure 23b. CLI Connection, AC-Coupled

Internal Mode Circuit Configuration

The AD9848/AD9849 may be used in Internal Mode using the circuit configuration of Figure 24. Internal Mode uses the same circuit as Figure 21, except that the horizontal pulses (CLPOB, CLPDM, PBLK, and HBLK) are internally generated in the AD9848/AD9849. These pins may be grounded when Internal Mode is used. Only the HD and VD signals are required from the ASIC.

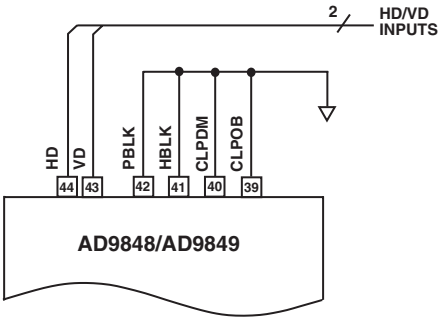

Figure 24. Internal Mode Circuit Configuration

TIMING EXAMPLES FOR DIFFERENT SEQUENCES

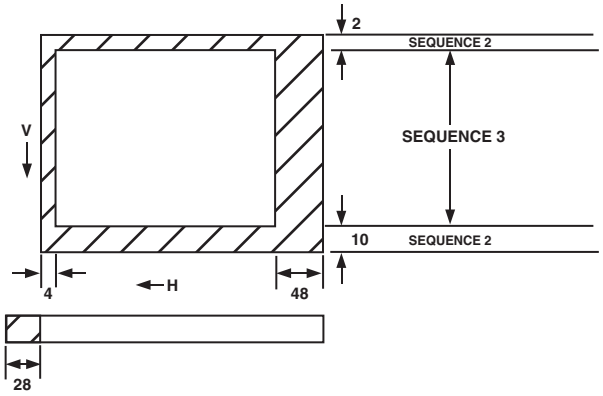

Figure 25. Typical CCD

Timing Examples (continued)

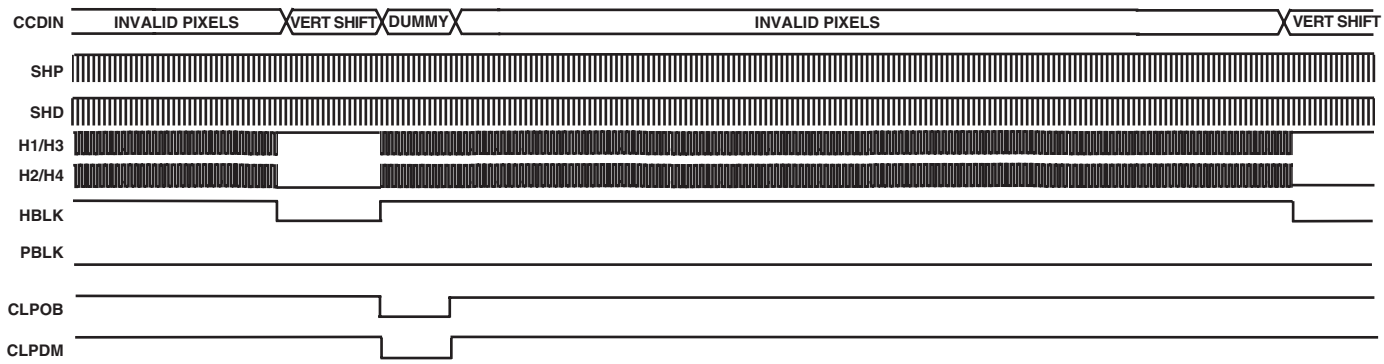

Figure 26. Sequence 1: Vertical Blanking

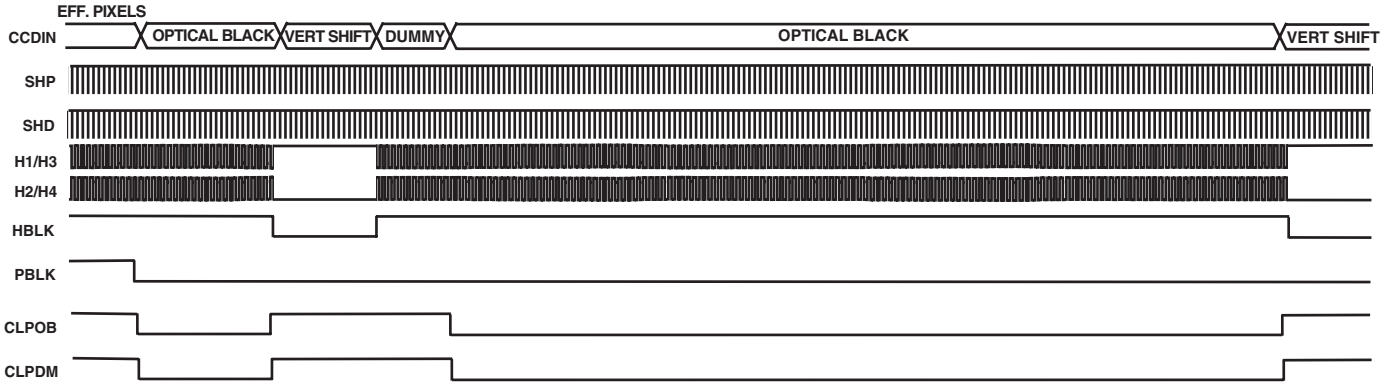

Figure 27. Sequence 2: Vertical Optical Black

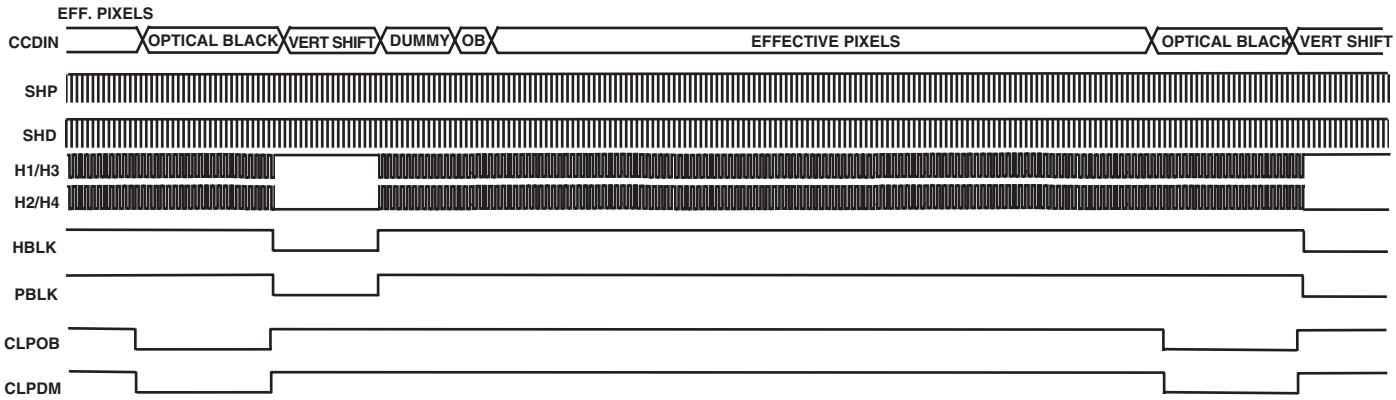

Figure 28. Sequence 3: Effective Pixels

OUTLINE DIMENSIONS

48-Lead Plastic Quad Flatpack [LQFP]
1.4 mm Thick
(ST-48)

Dimensions shown in millimeters

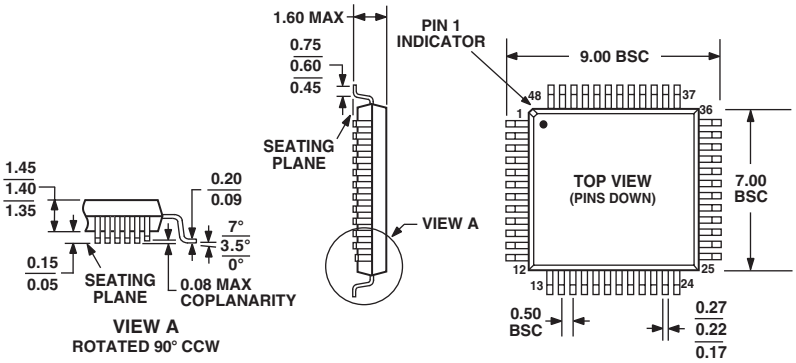

C02498–0–1/03(A)

Revision History

Location	Page
1/03—Data Sheet changed from REV. 0 to REV. A.	
Change to PIN FUNCTION DESCRIPTIONS	8
Change to Register Description Table – HBLK # Bits 147	16
Changes to Recommended Power Sequence section	23
Updated OUTLINE DIMENSIONS	32

PRINTED IN U.S.A.

X-ON Electronics

Largest Supplier of Electrical and Electronic Components

Click to view similar products for Analog Front End - AFE ***category:***

Click to view products by Analog Devices ***manufacturer:***

Other Similar products are found below :

WM8255SEFL ADE9078ACPZ-RL ADA4355ABCZ MAX86176ENX+T MAX86176EVKIT# TC500ACPE MCP3914A1-E/MV ISL51002CQZ-165 AFE5803ZCF TC500CPE AD73311ARSZ-REEL ADAS1000-3BCPZ AD73311LARUZ AD5590BBCZ ADPD1080WBCPZR7 AD73311ARSZ AD73311ARZ AD73311LARSZ AD73311LARSZ-REEL7 AD73360ARZ AD73360ASUZ AD73360LARZ AD8232ACPZ-R7 AD8456ASTZ AD9082BBPZ-2D2AC AD9081BBPZ-4D4AC AD9670BBCZ AD9675KBCZ AD73360LARZ-REEL AD9826KRSZ AD9826KRSZRL AD9860BSTZ AD9861BCPZ-50 AD9861BCPZ-80 AD9862BSTZ AD9865BCPZ AD9867BCPZ AD9895KBCZ AD9923ABBCZ AD9942BBCZ AD9943KCPZ AD9945KCPZ AD9945KCPZRL7 AD9949KCPZ AD9963BCPZ AD9972BBCZ AD9974BBCZ AD9977BBCZ AD9978BCPZ AD9979BCPZ