SYMBOL DEFINITION			MISSING NUMBERS
THE NUMBER INSIDE THE SYMBOL ( ) CORRESPONDS TO THE NUMBER ON THE INSPECTION REPORT FOR THIS DRAWING/PART NUMBER	TOTAL NO. OF SYMBOLS ON DRAWING	8	
	LAST NO. USED	10	

DWG STATUS					ZONE	REVISION HISTORY	AUTH	DR	APVD 1	APVD 2
DATE	STG	REV	N/P	CHG						
30MY00	R	01	-	-		ALL PARTS - REDRAWN TO PART DRAWING	000009	JTC	GGI	JS
30MY00	R	02	-	-		15393404 - RELEASED	000005	JTC	GGI	JS
26OC15	R	03	-	-		02965473, B3 & 1539404 - OBSOLETE	431219	NRM	JVM	RCE

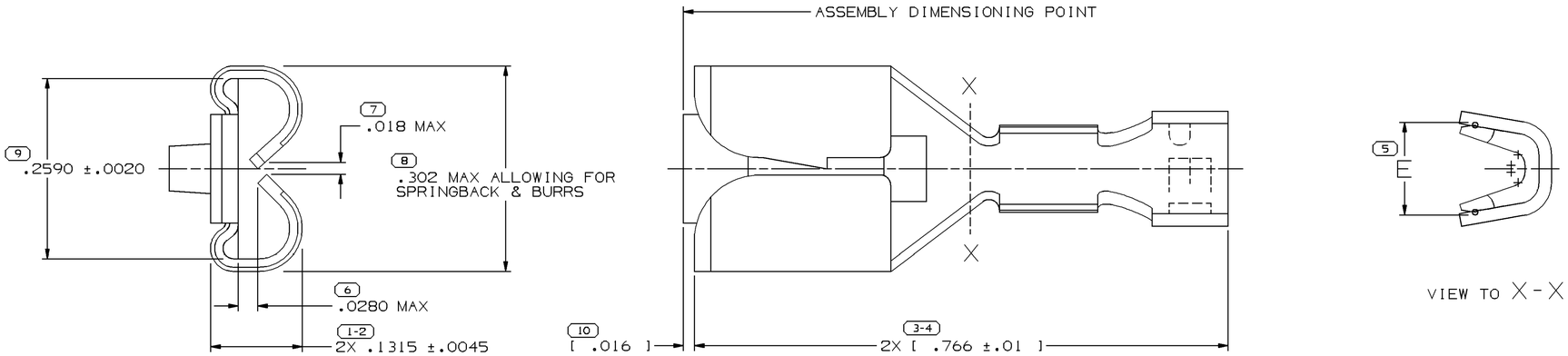

VIEW TO X-X

VIEW TO X-X

PART NO	REV	N/P	MAT'L SIZE	MAT'L SPEC	PART NO	REV	N/P	MAT'L SPEC	PART NO	REV	N/P	MAT'L SPEC	TYPE	SIZE (MM²)	DIA(MM)	E±.015
UNPLATED					TIN PLATED				SILVER PLATED					CABLE		
-	-	-	.0180 X .969	COPPER ALLOY	15393404	01	AA	TIN PLATED COPPER ALLOY	-	-	-	-	-	3	3.65-3.49	.185
12052626	D1	-	.0180 X .969	COPPER ALLOY	-	-	-	-	-	-	-	-	-	TWO 0.35	1.63-1.47	.145±.008
12052392	D1	-	.0180 X .969	COPPER ALLOY	-	-	-	-	-	-	-	-	-	0.35	1.63-1.47	.090±.008
12052391	D1	-	.0180 X .969	COPPER ALLOY	-	-	-	-	-	-	-	-	-	TWO 0.35	1.63-1.47	.145±.008
12052390	D1	-	.0180 X .969	COPPER ALLOY	-	-	-	-	-	-	-	-	-	0.35	1.63-1.47	.090±.008
02989515	X1	-	.0180 X .969	COPPER ALLOY	-	-	-	-	-	-	-	-	-	3	3.65-3.49	.185
02965580	X2	-	.0180 X .969	COPPER ALLOY	06288320	X1	-	TIN PLATED COPPER ALLOY	-	-	-	-	-	3	3.65-3.49	.185
02965483	X3	-	.0180 X .969	COPPER ALLOY	-	-	-	-	-	-	-	-	-	TWO 0.8-0.5	2.51-2.03	.150
02965482	X2	-	.0180 X .969	COPPER ALLOY	06288353	X1	-	TIN PLATED COPPER ALLOY	-	-	-	-	-	TWO 0.8-0.5	2.51-2.03	.150
02965474	X1	-	.0180 X .969	COPPER ALLOY	-	-	-	-	-	-	-	-	-	TWO 2-1	3.10-2.48	.200
02965473	X3	-	.0180 X .969	COPPER ALLOY	15324421	A2	-	TIN PLATED COPPER ALLOY	-	-	-	-	-	2-1	3.10-2.48	.145
02965472	X2	-	.0180 X .969	COPPER ALLOY	06288319	X2	-	TIN PLATED COPPER ALLOY	-	-	-	-	-	0.8-0.5	2.51-2.03	.125
02965471	X2	-	.0180 X .969	COPPER ALLOY	12010601	X2	-	TIN PLATED COPPER ALLOY	-	-	-	-	-	TWO 2-1	3.10-2.48	.200
02965470	X2	-	.0180 X .969	COPPER ALLOY	06288218	X2	-	TIN PLATED COPPER ALLOY	02989604	X1	-	SILVER PLATED COPPER ALLOY	-	2-1	3.10-2.48	.145
02965469	X2	-	.0180 X .969	COPPER ALLOY	06288318	X2	-	TIN PLATED COPPER ALLOY	02989939	X1	-	SILVER PLATED COPPER ALLOY	-	0.8-0.5	2.51-2.03	.125

NOTES

1. UNLESS OTHERWISE SPECIFIED AND/OR INDICATED:
   DIMENSIONS ARE TO FACE OF VIEW SHOWN AND AUTOMATICALLY ROUNDED BY COMPUTER FOR INSPECTION (SEE MATH MODEL FOR PRECISE DIMENSIONS). FOR ALL OTHER DIMENSIONS NOT SHOWN BUT REQUIRED FOR TOOL BUILD, SEE MATH MODEL FOR PRECISE TOOL PATH DATA.

2. DIMENSIONS ENCLOSED IN [ ] INDICATE "AFTER COIN"

5 PROCESS SENSITIVE DIMENSION

DIMENSIONS ENCLOSED IN ( ) INDICATE REFERENCE DIMENSIONS AND NO TOLERANCE LIMITS ARE ESTABLISHED

DIMENSIONAL RANGE (MM)		CHART D
FROM	0	>12
TO	12	
TOLERANCE UNLESS OTHERWISE SPECIFIED		
	±0.1	±0.2
ANGULAR TOLERANCE ±2°		

A LINE DRAWN THROUGH A PART NUMBER INDICATES THAT PHYSICAL PARTS ARE NOT AVAILABLE FOR ORDERING.

PART NUMBERS THAT DO NOT HAVE A LINE PRESENT INDICATE THAT PHYSICAL PARTS ARE AVAILABLE FOR ORDERING.

CONTACT DELPHI SALES TO ASSURE AVAILABILITY OF PARTS.

DWG TYPE: PART DRAWING

STYLE

VOLUME (CU³)

DISTR CODE

UNLESS OTHERWISE SPECIFIED

THIS DOCUMENT IS IN ACCORDANCE WITH ASME Y14.5M-1994 AS AMENDED BY THE GM GLOBAL DIMENSIONING AND TOLERANCING ADDENDUM - 1997. ALL GEOMETRIC TOLERANCES AND RELATED DATUMS APPLY RFS. RULE #1(PERFECT FORM AT MMC) DOES NOT APPLY WHEN RELATIONSHIP BETWEEN FEATURES IS ESTABLISHED BY ORIENTATION OR LOCATION TOLERANCES. SEPARATE POSITION CALLOUTS MAY BE GAGED SEPARATELY, REGARDLESS OF DATUM REFERENCE.

ALL DIMENSIONS ARE IN INCHES

REFERENCE

THIRD ANGLE PROJECTION

DO NOT SCALE

USE MATH DATA

CAD NX

DELPHI

DELPHI PACKARD ELECTRICAL/ELECTRONIC ARCHITECTURE
WARREN, OH

COPYRIGHT 2000 DELPHI CORPORATION AND/OR ITS AFFILIATES.
ALL RIGHTS RESERVED.
REVISED 2015
THIS DRAWING IS THE PROPERTY OF DELPHI CORPORATION AND CONTAINS DELPHI CONFIDENTIAL INFORMATION. THE REPRODUCTION, DISTRIBUTION AND UTILIZATION OF THIS DOCUMENT OR ITS RELATED CAD MATH DATA, AS WELL AS COMMUNICATION OF ANY CONTENT TO OTHERS, WITHOUT EXPRESS AUTHORIZATION, IS PROHIBITED.

		DATE
DR		
APVD1	JACOB TREJO C	30MY00
APVD2	G. G. IZQUIERDO	31MY00
APVD3	J. SVETTE	06JN00
APVD4		
APVD5		

SUBSTANCES OF CONCERN AND RECYCLED CONTENT PER DELPHI 10949001

MATERIAL: SEE CHART

DRAWING NAME: TAXI TERM F 58 SERIES

DRAWING NUMBER: 02962878

SIZE	SCALE	FRAME NO	SHEET NO	STG	REV	N/P
A1	10:1	1 OF 1	1 OF 1	R	03	-

User: CZQR09
Part: 02962878-CUS01-S01
Message:
Date: 10-Nov-15
Time: 07:18

X-ON Electronics

Largest Supplier of Electrical and Electronic Components

Click to view similar products for Automotive Connectors ***category:***

Click to view products by APTIV ***manufacturer:***

Other Similar products are found below :

003-018-000 60403001 60993906-B 629515004020001 M902-2131 M902-2161 72.330.1035.1 73.353.4028.0 F119300-B F166900 F258300-B F358300-B F407400 F444110 F487000 F509500B-B 827153-1 8N1515-32-24P 9-1326729-8 925474-1 928905-1 964562-4 968782-1 GT17SA-8DS-HU 98891-1012 98947-1016 12004475-L 12010290 12010309-B 12015454 12020219-B 12020308 12041318-B 12052225-L 12052466 12059125 12064869 12004327-B 12010503-B 12015308 12015384 12015909 1-21030-1 12041254 12041318 12047946-B 12047957 12047957-L 12059473 12066261