SYMBOL DEFINITION			MISSING SYMBOLS
A DIMENSION WITHOUT AN INSPECTION REPORT SYMBOL (...) DOES NOT REQUIRE INSPECTION. IT MAY BE CONTROLLED ON THE INDIVIDUAL COMPONENT DRAWING.	TOTAL NO OF INSPECTIONS REQUIRED	12	13
	LAST NO. USED	14	

DATE	STATUS	SHEET	NOTE	ZONE	REVISION HISTORY	APV	DR	DRAWING
08FEB99	R	11	-	-	ALL ACTIVE PARTS - MORE DEPARTMENT DRAWINGS NO REFERENCE TO RS	49887	JR	06288977
05JAN01	R	12	-	-	ALL ACTIVE PARTS - REMOVED STAMP LABELS WEB TRACK NOTE	61372	KYY	06288977
04MAR03	R	13	-	-	06288980 - OBSOLETE	42563	PCS	06288977

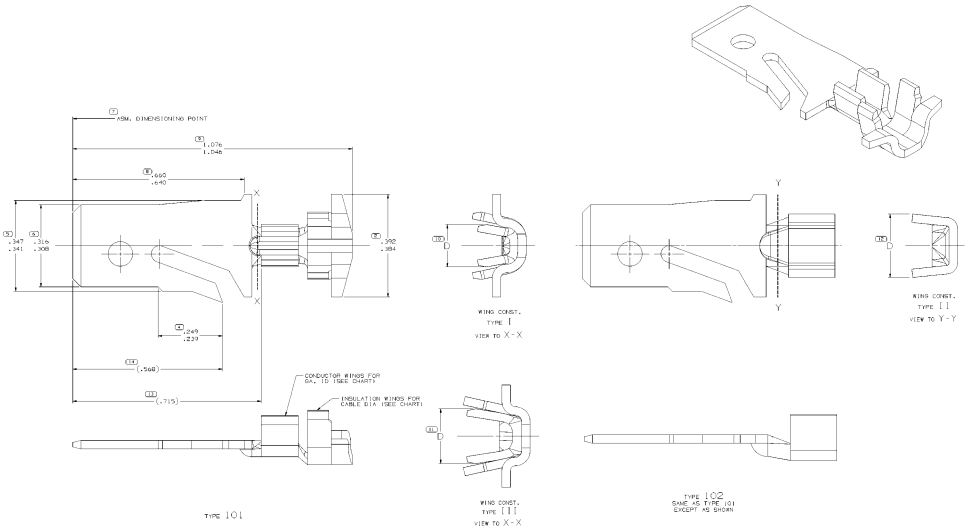

NOTES

1. UNLESS OTHERWISE SPECIFIED AND/OR INDICATED:

   DIMENSIONS ARE TO FACE OF VIEW SHOWN AND INCLUDE PLATING. DIMENSIONS MUST BE CHECKED BY INSPECTION USING MATH MODEL FOR PRECISE DIMENSIONS. FOR ALL OTHER DIMENSIONS NOT SHOWN BUT REQUIRED FOR TOOL BUILD, SEE MATH MODEL FOR PRECISE TOOL PATH DATA.

-	-	-	.020 X .062	-				08P1132	B	2	M1508129 METL. NONFERROUS C21000 EX SPR	1	.39-.200	(0)	.210	(1)	
-	-	-	.020 X .062	-				08P1142	C	-	M1371129 METL. NONFERROUS C26000 1/2 HD	(1)16 & (1)20	(.38-.140 & .07-.113)	(0)	.240	-	-
-	-	-	.020 X .062	-				08P2580T	D	2	M1271129 METL. NONFERROUS C26000 1/2 HD	15	.126-.155	(0)	.160	-	-
-	-	-	.020 X .062	-				08P8480	E	-	M1508129 METL. NONFERROUS C21000 EX SPR	12 & 19	.120-.155 & .100-.120	(0)	.240	-	-
08P8422	2	-	.020 X .062	M1401129 METL. NONFERROUS C26000 1/2 HD				08P8422	2	-		19 MM	-	(.2-.35)	(0)	.160-.195	-
08P8432	2	-	.020 X .062	M1540129 METL. NONFERROUS C21000 EX SPR				08P8432	2	1	M1508129 METL. NONFERROUS C21000 EX SPR	15	-	(.30-.45)	(0)	.195	-
08P8442	2	-	.020 X .062	M1540129 METL. NONFERROUS C21000 EX SPR				08P8442	2	1	M1508129 METL. NONFERROUS C21000 EX SPR	11	-	-	(.02)	.240	(1)
PART NO REVISION			MATL SIZE		MATL SPEC			PART NO REVISION			MATL SPEC	GA.(ID)	CABLE DIA		TYPE	WIRE CONST	
UNPLATED								TIN PLATED									

PART DRAWING	
TITLE	
SCALE (NAT)	VIEW DIR

UNLESS OTHERWISE SPECIFIED
THIS DRAWING IS A DELPHI PROPRIETARY DOCUMENT AND MUST BE RETURNED TO DELPHI UPON REQUEST. DUPLICATION OR REPRODUCTION WITHOUT WRITTEN PERMISSION IS PROHIBITED.

ALL DIMENSIONS ARE IN INCHES

REFERENCE

PROCESS DEPARTTURE CHECKBOX		
SCHEDULE DRAWING		
SCHEDULE DRAWING		
PRELIMINARY TOOL		
PRELIMINARY TOOL		
MATERIAL SPECIFICATION		
MATERIAL SPECIFICATION		

THIRD ANGLE PROJECTION

GD-1ST GD-2ND

USE AUTO DATA

DELPHI
DELPHI PACKARD ELECTRIC/DELCO ELECTRONICS, WARREN, OHIO 44486

COPYRIGHT: DELPHI PACKARD ELECTRIC SYSTEMS
ALL RIGHTS RESERVED

THIS DRAWING IS THE PROPERTY OF DELPHI CORPORATION AND MUST BE RETURNED TO DELPHI UPON REQUEST. NO REPRODUCTION OR USE MAY BE MADE WITHOUT WRITTEN PERMISSION. DELPHI CORPORATION, ALL RIGHTS RESERVED.

DR		DATE
APVD	J.R. SIEGENA	14FEB13
APVD	J. SIBLANTI	20FEB13
APVD	QUALITY MENSON	22FEB13
APVD		
APVD		

SUBSTANCES OF CONCERN ARE REGULATED (REFER TO SPEC 9.5.1, APPROVED)

TITLE
SOP START

DELPHIPACKARD NAME
TAXI TERM M 99 SERIES

DRAWING NUMBER
06288977

SIZE	SCALE	TRACE NO	SHEET NO	REV	NO	TOTAL
A2	(01)	1	OF 1	R	12	

X-ON Electronics

Largest Supplier of Electrical and Electronic Components

Click to view similar products for Automotive Connectors ***category:***

Click to view products by APTIV ***manufacturer:***

Other Similar products are found below :

003-018-000 60403001 60993906-B 629515004020001 M902-2131 M902-2161 72.330.1035.1 73.353.4028.0 F119300-B F166900 F258300-B F358300-B F407400 F444110 F487000 F509500B-B 827153-1 8N1515-32-24P 9-1326729-8 925474-1 928905-1 964562-4 968782-1 GT17SA-8DS-HU 98891-1012 98947-1016 12004475-L 12010290 12010309-B 12015454 12020219-B 12020308 12041318-B 12052225-L 12052466 12059125 12064869 12004327-B 12010503-B 12015308 12015384 12015909 1-21030-1 12041254 12041318 12047946-B 12047957 12047957-L 12059473 12066261