D

THIS DRAWING AND DESIGN HEREON CONSTITUTES A PROPRIETARY DESIGN OF PACKARD ELECTRIC DIVISION AND IS NOT TO BE DUPLICATED OR REPRODUCED WITHOUT AUTHORITY OF PACKARD ELECTRIC DIVISION.

DO NOT SCALE

PACKARD ELECTRIC DIVISION
GENERAL MOTORS CORPORATION
WARREN, OHIO

PART NO. 1203 4001

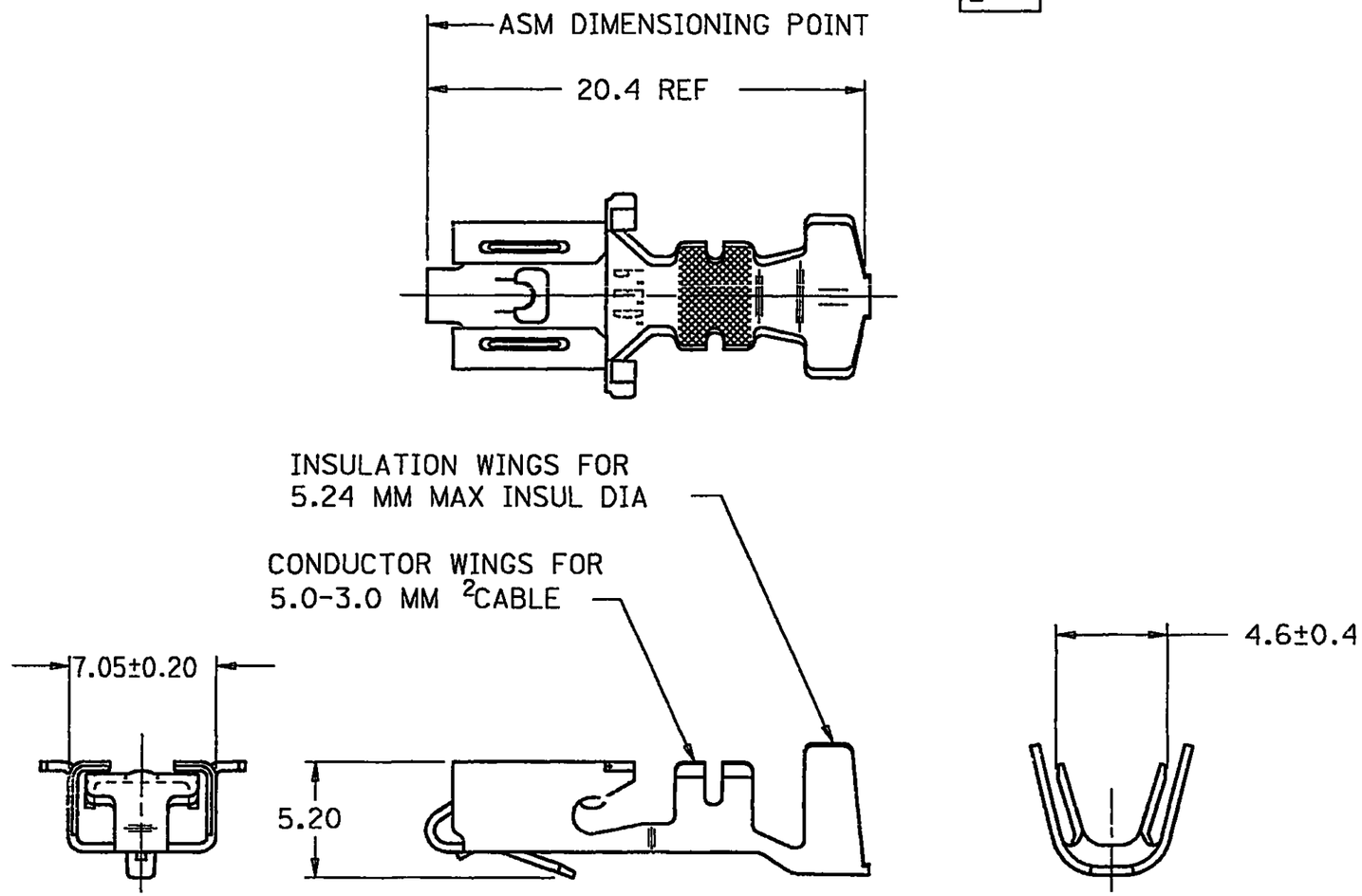

DATE	SYM	N/P	REVISION RECORD	AUTHORITY	DR	CK
18JL88	-	-	REDRAWN & REVISED; REMOVED			
			"PATENT PENDING"; SHT #4 WAS			
			SHT #2 IN REF NO; REV LEVEL			
			REMAINS AT "D"	120124	AL	DKS
18JL88	E		PICTURE REVISED	120126	AL	DKS
30JN93	F		REVISED GRAPHICS & 5.20 WAS 5.40	154898	RLB	BKD
05FE09	07		WAS UNPLATED AND MAT'L			
			SPEC WAS S-1519030	407263	EFS	FKV
01JL11	07	AA	UPDATED MAT'L CALLOUT	414727	AHY	GEM

PED/INTERGRAPH EMS

FILE SPEC: bdew /usr2/bdew/4001.plt 01-SEP-1993 17:04

THIRD ANGLE PROJECTION

METRIC
DIMENSIONS ARE IN MILLIMETERS UNLESS OTHERWISE SPECIFIED.

CODE NO. 6900

Q.C.

TOLERANCE UNLESS OTHERWISE SPECIFIED
DECIMAL: ONE PLACE ± 0.3, TWO PLACE ± 0.15
ANGULAR ±2°

DWG. DATE 17MY82 | SCALE NONE | DR.

EST. NO.

CK. F. HESTON | DATE 12JA85

REFERENCE NO. SHEET #4
12015135 "D" SIZE

APPR. | DATE

APPR. R. D. KEARNS | DATE 31JA85

MATERIAL SPEC. TIN PLATING COPPER ALLOY

NAME TERM F M/P 630 SPL PLATED TANG

PART NO. 1203 4001
OUTLINE DRAWING

SIZE B

PACKARD ELECTRIC

X-ON Electronics

Largest Supplier of Electrical and Electronic Components

Click to view similar products for Automotive Connectors ***category:***

Click to view products by APTIV ***manufacturer:***

Other Similar products are found below :

003-018-000 60403001 60993906-B 629515004020001 M902-2131 M902-2161 72.330.1035.1 73.353.4028.0 F119300-B F166900 F258300-B F358300-B F407400 F444110 F487000 F509500B-B 827153-1 8N1515-32-24P 9-1326729-8 925474-1 928905-1 964562-4 968782-1 GT17SA-8DS-HU 98891-1012 98947-1016 12004475-L 12010290 12010309-B 12015454 12020219-B 12020308 12041318-B 12052225-L 12052466 12059125 12064869 12004327-B 12010503-B 12015308 12015384 12015909 1-21030-1 12041254 12041318 12047946-B 12047957 12047957-L 12059473 12066261