SYMBOL DEFINITION		
A DIMENSION WITHOUT AN INSPECTION REPORT SYMBOL (▭) DOES NOT REQUIRE INSPECTION. IT MAY BE CONTROLLED ON THE INDIVIDUAL COMPONENT DRAWING.	TOTAL NO OF INSPECTIONS REQUIRED	4
	LAST NO. USED	4

MISSING SYMBOLS
NO MISSING SYMBOL NUMBER

DWG STATUS					ZONE	REVISION HISTORY	AUTH	DR	APVD	APVD
DATE	STS	REV	N/P	CHG					1	2
06MY03	R	B3	-	-	-	REDRAWN TO PD AND ADDED OPTIONAL CONSTRUCTION	240399	RH	RH	FR
21JL03	R	D3	-	-	-	MATL SPEC WAS M0661003	243715	ESR	ESR	ET
15AU03	R	D3	AA	-	-	DIM 8.4 +0.28/-0.3 WAS 8.4 +0.15/-0.3 AND UPDATED PDM ATTRIBUTES	244702	LFS	RWF	FR

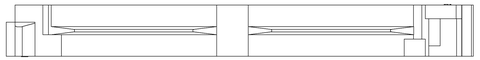

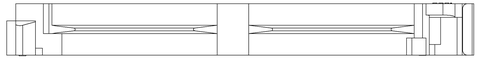

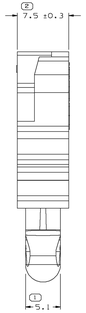

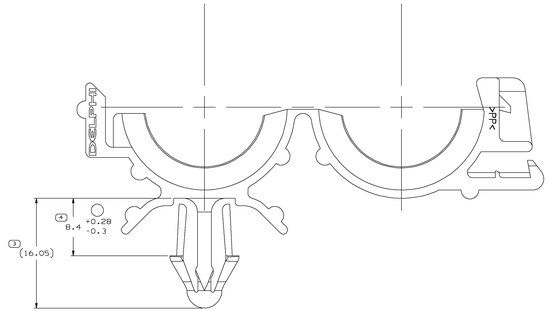

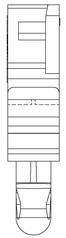

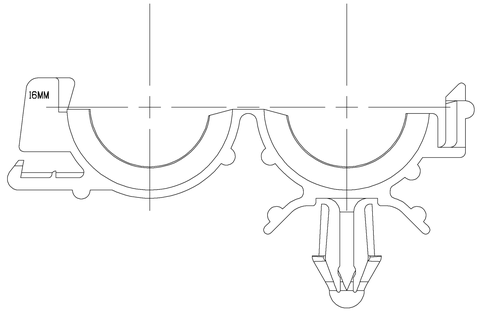

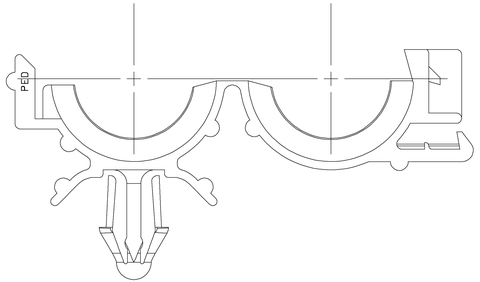

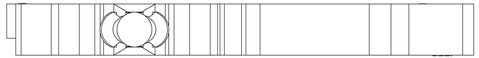

OPTIONAL CONSTRUCTION

NOTES

1. UNLESS OTHERWISE SPECIFIED AND/OR INDICATED:
   DIMENSIONS ARE TO FACE OF VIEW SHOWN AND AUTOMATICALLY ROUNDED BY COMPUTER FOR INSPECTION (SEE MATH MODEL FOR PRECISE DIMENSIONS). FOR ALL OTHER DIMENSIONS NOT SHOWN BUT REQUIRED FOR TOOL BUILD, SEE MATH MODEL FOR PRECISE TOOL PATH DATA.
2. MATERIAL RECYCLING CODE >PP< PER SAE J1344. {{1X10.1} RAISED CHARACTERS AS SHOWN TO BE LOCATED ON ANY EXTERIOR SURFACE. OPTIONAL CONSTRUCTION TO BE NO MATERIAL RECYCLING CODE.
3. {{1X10.1} RAISED DELPHI CORPORATE BRAND TO BE LOCATED ON ANY EXTERIOR SURFACE, PREFERABLY VISIBLE AT FINAL ASSEMBLY. OPTIONAL CONSTRUCTION TO BE "PED" OR NO LOGO.
4. THIS PART TO FIT 16 I.D. CONVOLUTED CONDUIT.
5. RECOMMENDED HOLE SIZE FOR CLIP 6.6/6.1 DIA HOLE SIZE IN 3.15 MIN TO 6.3 MAX THICK STOCK.

DWG TYPE	
PART DRAWING	
STYLE	
VOLUME (CM³) 2.154	DISPLY EDGE
WEIGHT 6900.6901	

UNLESS OTHERWISE SPECIFIED

THIS DOCUMENT IS IN ACCORDANCE WITH ASME Y14.5M-1994 UNLESS OTHERWISE SPECIFIED. DIMENSIONS AND TOLERANCES ARE PER ASME Y14.5M. ALL GEOMETRIC TOLERANCES AND RELATED SYMBOLS APPLY HERE. RULE #1(PERFECT FORM AT MMC) APPLIES TO ALL FEATURES OF SIZE UNLESS OTHERWISE SPECIFIED. DRAWING DIMENSIONS ARE CALCULATED VALUES. DERIVED DIMENSIONS ARE CALCULATED BUT NO GRADS (BUMPWATER), DERIVED FROM THE MATH DATA.

ALL DIMENSIONS ARE IN MILLIMETERS

REFERENCE

(2) PROCESS SENSITIVE DIMENSION

DIMENSION ENCLOSED IN ( ) INDICATES REFERENCE A DIMENSION AND NO TOLERANCE WILL BE ESTABLISHED

R 0.1 MAX

R 0.2 MAX

SHARP CORNER TOLERANCE

DIMENSIONAL RANGE (MM)								
FROM	>6	>10	>30	>70	>100	>200	>400	>600
TO	6	30	70	100	200	400	600	
TOLERANCE UNLESS OTHERWISE SPECIFIED								
±0.15	±0.2	±0.3	±0.4	±0.5	±0.8	±1.0	±1.2	
ANGULAR TOLERANCE ±2°								

THIRD ANGLE PROJECTION

DO NOT SCALE

USE MATH DATA

DELPHI

DELPHI PACKARD ELECTRIC SYSTEMS
WARREN, OH

	DATE
DR	
APVD1 T. MURCHEY	100CB3
APVD2 E.V. McGOWAN	100CB3
APVD3	
APVD4	
APVD5	

SUBSTANCES OF CONCERN AND RECYCLED CONTENT PER DELPHI (DP4900)

MATERIAL

M20970003 PP IM GRA

DRAWING NAME

MOUN CLIP 6.35 16.00 CDT

DRAWING NUMBER

12041320

SIZE	SCALE	FRAME NO	SHEET NO	STS	REV	N/P
A1x3	5:1	1 OF 2	1 OF 1	R	D3	AA

DRAWING NUMBER
12041320
SIZE A1x3 | SCALE 5:1 | FRAME NO 2 OF 2 | SHEET NO 1 OF 1 | STS R | REV D3 | N/P AA

ISO41350

X-ON Electronics

Largest Supplier of Electrical and Electronic Components

Click to view similar products for Automotive Connectors ***category:***

Click to view products by APTIV ***manufacturer:***

Other Similar products are found below :

003-018-000 60403001 60993906-B 629515004020001 M902-2131 M902-2161 72.330.1035.1 73.353.4028.0 F119300-B F166900 F258300-B F358300-B F407400 F444110 F487000 F509500B-B 827153-1 8N1515-32-24P 9-1326729-8 925474-1 928905-1 964562-4 968782-1 GT17SA-8DS-HU 98891-1012 98947-1016 12004475-L 12010290 12010309-B 12015454 12020219-B 12020308 12041318-B 12052225-L 12052466 12059125 12064869 12004327-B 12010503-B 12015308 12015384 12015909 1-21030-1 12041254 12041318 12047946-B 12047957 12047957-L 12059473 12066261