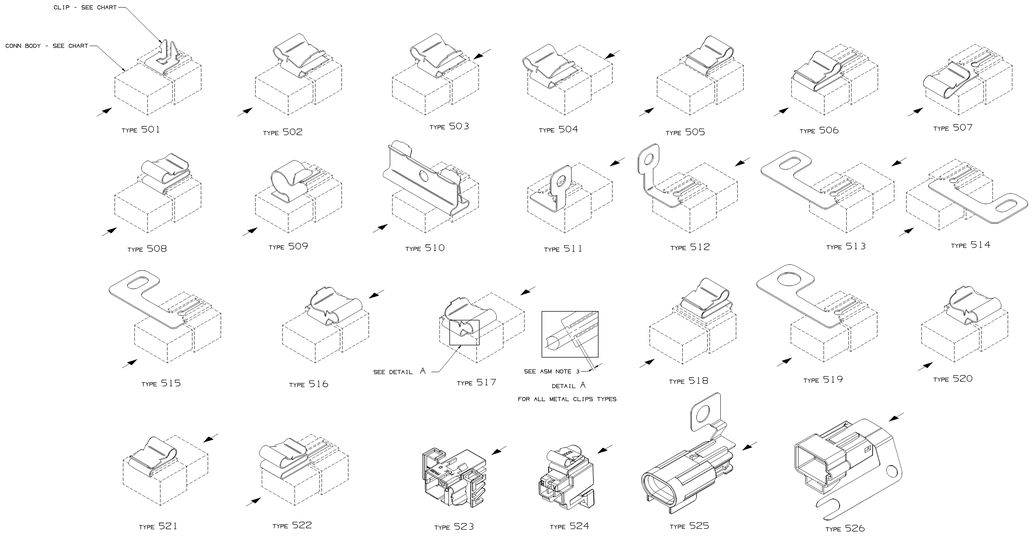

CONN BODY & CLIP ASM	REV	N/P	STATUS	CAVITY	CONN BODY	CLIP	TYPE	ASM NOTES	COLOR	SEALING CODE
3670037	01	-		4	1542924	1495798	521	1,6,3,5	YEL	-
3671960	01	-		4	1542924	1495801	521	1,6,3,5	YEL	-
5496219	01	AA		10	2064872	1495789	526	1,4,3	BLU	-
3606944	01	AA		4	1535613	1525214	509	1,4,3	BLK	4
7582975	01	AA		8	2047931	1495798	505	1,4,3	BLK	3
7543895	01	-		2	2077921	1489525	524	1,4,3	YEL	0
7530000	01	-		4	1612685	1495816	509	1,4,3	BLK	4
7523333	01	AA	OBS	3	2126715	1489525	509	1,4,3	BLK	4
7520392	01	-		2	1535678	1520291	509	1,4,3	BLK	4
5499837	01	-		6	2015395	1495812	521	1,4,3	YEL	0
5499829	01	-		2	1460340	1495798	521	1,4,3	YEL	0
5497206	01	-		24	2117293	1495791	509	1,4,3	BLU LT	0
5497205	01	-		12	1535854	1495825	519	1,4,3	BLK	0
5497504	01	-		8	1535457	1495801	521	1,4,3	YEL	0
5497503	01	-		2	2047983	1495801	514	1,4,3	BLK	0
5497202	01	-		2	2047931	1495798	505	1,4,3	BLK	0
5497201	01	-		2	2077921	1495806	524	1,4,3	YEL	0
5497200	01	-		2	2186989	1495811	520	1,4,3	YEL	0
5496199	01	-		2	2186989	1495811	520	1,4,3	YEL	0
5496198	01	-		2	2182102	1495811	520	1,4,3	YEL	0
5496197	01	-		2	2077921	1495798	524	1,4,3	YEL	0
5496195	01	-		7	2052030	1495811	520	1,4,3	BLK	3
5496195	01	-		8	2047931	1495798	505	1,4,3	BLK	3
5496194	01	AA		2	2182000	1495881	509	1,4,3	BLK	3
5496193	01	-		8	2191311	1495807	514	1,4,3	GRA	3
5496192	01	-		4	2015024	1495821	520	1,4,3	BLK	3
5496191	01	AA		5	2121974	1495881	509	1,4,3	NAT	3
5496190	01	-		8	2047931	1495825	519	1,4,3	BLK	3
5496189	01	-		2	1535281	1495806	524	1,4,3	YEL	0
5496188	01	-		2	1182000	1495829	509	1,4,3	BLK	0
5496187	01	AA		2	2126715	1495881	509	1,4,3	BLK	0
5496186	01	-		2	2052891	1495811	517	1,4,3	YEL	0
5496185	01	-		2	2047931	1495798	505	1,4,3	BLK	0
5496184	01	-		2	2077921	1495798	524	1,4,3	YEL	0
5495970	01	-		2	2186989	1495806	524	1,4,3	YEL	0
5495967	01	-		2	2077921	1495801	518	1,4,3	YEL	0
5471204	01	AB	OBS	2	1460340	2040578	521	1,4,3	YEL	0
5471483	01	AA	OBS	2	2077921	2060494	524	1,4,3	YEL	0
5448015	01	AC	OBS	6	2015345	2048916	521	1,4,3	BLK	0
5453230	01	AB	OBS	24	2117293	2048580	509	1,4,3	BLU LT	0
5447742	01	AB	OBS	24	1535213	2048580	509	1,4,3	GRA	0
5445669	01	AB	OBS	12	1535854	1535485	519	1,4,3	BLK	0
5439342	01	AB	OBS	4	1535623	2089646	509	1,4,3	GRA	4
5428725	02	AB	OBS	2	2047461	2048458	514	1,4,3	BLK	0
5412788	01	AB	OBS	2	2186989	2090311	514	1,4,3	YEL	0
5258914	01	AA	OBS	2	2077921	2186196	517	1,4,3	YEL	0
5255373	01	AB	OBS	2	2186989	2047390	502	1,4,3	YEL	0
5238783	01	AB	OBS	2	2077921	2047390	504	1,4,3	YEL	0
5238765	02	AB	OBS	2	2186989	2088875	502	1,4,3	YEL	0
5231132	01	AB	OBS	2	2077921	2047390	504	1,4,3	YEL	0
5591132	A1	-	OBS	2	2186989	2090508	504	1,4,3	YEL	0
5250588	A1	-	OBS	2	2186989	2040578	505	1,4,3	YEL	0
5320545	A2	-	OBS	2	2152024	2047974	505	1,4,3	BLK	0
5139434	A3	-	OBS	2	2077921	2031284	518	1,4,3	YEL	0
5139414	A2	-	OBS	10	2045808	2047390	502	1,4,3	BLK	0
5139274	A3	-	OBS	2	2186989	2186196	520	1,4,3	YEL	0
5139266	A3	-	OBS	4	2162102	2028882	520	1,4,3	BLK	4
5139076	A3	-	OBS	2	2077921	2040578	521	1,4,3	YEL	0
5137805	A2	-	OBS	7	2047913	2102870	505	1,4,3	GRA	3
5137542	A4	-	OBS	7	2052030	2028825	520	1,4,3	BLK	3
5137605	A3	-	OBS	6	2121277	2062945	508	1,4,3	BLK	3
5137347	A3	-	OBS	8	2047913	2073342	505	1,4,3	BLK	3
5135479	A3	-	OBS	2	2182000	2089431	514	1,4,3	YEL	0
5135438	A4	-	OBS	8	2191311	2092031	514	1,4,3	GRA	3
5135406	A2	-	OBS	2	2052891	2040578	521	1,4,3	YEL	0
5131879	A2	-	OBS	8	2047913	2040578	505	1,4,3	BLK	3
5131820	A2	-	OBS	2	2152024	2073342	505	1,4,3	BLK	0
5131820	A2	-	OBS	4	2186989	2073342	505	1,4,3	BLK	0
5126545	A3	-	OBS	5	2191974	2089491	509	1,4,3	NAT	3
5126115	A4	-	OBS	2	2047913	2090415	519	1,4,3	BLK	0
5124353	A2	-	OBS	4	2092819	2073464	509	1,4,3	BLK	0
5124904	A2	-	OBS	2	2186989	2073390	502	1,4,3	YEL	0
5124901	A3	-	OBS	2	2052891	2073390	504	1,4,3	YEL	0
5124899	B2	-	OBS	2	2162000	2073464	505	1,4,3	BLK	0
5124882	A3	-	OBS	6	2034481	2073390	504	1,4,3	GRA	0
5124776	A3	-	OBS	3	2126715	2089431	509	1,4,3	GRA	0
5124338	A3	-	OBS	6	2015345	2063945	518	1,4,3	BLK	0
5124324	A4	-	OBS	2	2052891	2028825	517	1,4,3	YEL	0
5124268	B2	-	OBS	6	2124107	2073390	502	1,4,3	BLK	3
5120897	A3	-	OBS	2	2077921	2073390	504	1,4,3	YEL	0
5120149	B3	-	OBS	2	2092891	2089491	504	1,4,3	YEL	0
5089962	A2	-	OBS	2	2052031	2028825	515	1,4,3	BLK	0
5077932	B3	-	OBS	2	2073349	2089491	504	1,4,3	YEL	0
5076119	A2	-	OBS	2	2073349	2073390	504	1,4,3	YEL	0
5060838	A1	-	OBS	6	2015345	2060806	521	1,4,3	BLK	0
5059545	A2	-	OBS	12	2040747	2073390	504	1,4,3	BLK	0
5052524	A2	-	OBS	10	2049836	2073390	502	1,4,3	BLK	0
5052002	A2	-	OBS	6	2015345	2052001	513	1,4,3	BLK	0
5048170	A2	-	OBS	4	2049544	2089458	514	1,4,3	BLK	0
5047674	A1	-	OBS	8	2010000	2041482	504	1,4,3	BLK	0
5031914	A2	-	OBS	4	2052031	2089491	503	1,4,3	BLK	0
5890217	A1	-	OBS	1	2028104	2073342	505	1,4,3	NAT	-
6294494	C6	-	OBS	12	2098926	2073342	505	1,4,3	NAT	-
6294190	A4	-	OBS	12	2098926	2094189	510	1,4,3	BLK	-
6294050	C6	-	OBS	10	2098962	2073342	505	1,4,3	BLK	-
6294035	A4	-	OBS	10	2098962	2089458	515	1,4,3	BLK	-
6294033	A4	-	OBS	10	2098962	2089988	515	1,4,3	BLK	-
6288613	C6	-	OBS	10	2077989	2073390	502	1,4,3	NAT	-
6288116	A4	-	OBS	12	2098926	2073342	505	1,4,3	NAT	-
6288068	A4	-	OBS	10	2073389	2089458	515	1,4,3	BLK	-
6287980	A4	-	OBS	10	2098962	2089458	515	1,4,3	BLK	-
6089680	B14	-	OBS	2	2077939	2089458	501	1,4,3	BLK	-
6089664	A4	-	OBS	2	2098348	2089501	508	1,4,3	BLK	-
6089652	A4	-	OBS	12	2098926	2073390	502	1,4,3	BLK	-
6084474	CE2	-	OBS	10	2077989	2073345	501	1,4,3	NAT	0
6084462	B14	-	OBS	1	2077968	2089458	501	1,4,3	NAT(CREAM)	-
6084461	B14	-	OBS	1	2077968	2089458	514	1,4,3	NAT(CREAM)	-
6084460	B14	-	OBS	7	2098499	2089458	501	1,4,3	BLK	-
6084411	C6	-	OBS	2	2098348	2094582	507	1,4,3	BLK	-
6077754	C6	-	OBS	10	2077989	2073342	505	1,4,3	NAT	-
6077692	C6	-	OBS	8	2077577	2073345	501	1,4,3	BLK	-

SYMBOL DEFINITION		
A DIMENSION WITHOUT AN INSPECTION REPORT IS A REFERENCE DIMENSION. INSPECTION IS MAY BE CONTROLLED ON AN INDIVIDUAL COMPONENT DRAWING.	TOTAL NO. OF SYMBOLS ON DRAWING	2
	LAST NO. USED	2

MISSING NUMBERS

REVISION HISTORY											

X-ON Electronics

Largest Supplier of Electrical and Electronic Components

Click to view similar products for Automotive Connectors ***category:***

Click to view products by APTIV ***manufacturer:***

Other Similar products are found below :

003-018-000 60403001 60993906-B 629515004020001 M902-2131 M902-2161 72.330.1035.1 73.353.4028.0 F119300-B F166900 F258300-B F358300-B F407400 F444110 F487000 F509500B-B 827153-1 8N1515-32-24P 9-1326729-8 925474-1 928905-1 964562-4 968782-1 GT17SA-8DS-HU 98891-1012 98947-1016 12004475-L 12010290 12010309-B 12015454 12020219-B 12020308 12041318-B 12052225-L 12052466 12059125 12064869 12004327-B 12010503-B 12015308 12015384 12015909 1-21030-1 12041254 12041318 12047946-B 12047957 12047957-L 12059473 12066261