SYMBOL DEFINITION		
A DIMENSION WITHOUT AN INSPECTION REPORT SYMBOL (31) DOES NOT REQUIRE INSPECTION. IT MAY BE CONTROLLED ON THE INDIVIDUAL COMPONENT DRAWING.	TOTAL NO OF INSPECTIONS REQUIRED	31
	LAST NO. USED	29

MISSING SYMBOLS
22-25

DWG STATUS					ZONE	REVISION HISTORY	AUTH					
DATE	STS	REV	N/P	CHG				DR	APD	CHD	APD	
05AP00	R	01	-	-	-	CLEARED REV COLUMN & "SHT 1 OF 6" WAS "SHT 1 OF 5"	000005	FWO	FKV	CD		
11OC00	R	02	-	-	-	12052466 - REVISED CORE WIRE ATTRIBUTE FROM SHIE TO STAMP GERMITION, REVISED WATERIAL SPEC WAS P0604BM	203713	JMR	JMR	LF		
24SE01	R	03	-	-	-	12064971 - ADDED TO CUSTOMER PART DRAWING	213895	AKJ	AKJ	DS		
23AU02	R	04	-	-	-	REMOVED CUSTOMER STAMP FOR PART NUMBER 12047767	227776	JLB	JLB	DS		
12DE01	R	05	-	-	-	15305306 - REVISED REV LEVEL	218490	RAD	DEG	BMC		
17SE03	R	06	-	-	-	12047767 - UPDATED PDM ATTRIBUTES	249088	AKW	RAA	TM		
14OC03	R	07	-	-	-	15317766, 15305306, 12064971, 12047687 - MATERIAL SPEC WAS M3604159	249588	KDK	TLD	BG		
17FE04	-	08	-	-	-	12047767,12052466,12064971,12160812, 15305306 & 15317766 - T.O.D. UPDATED	256621	JS	JS	BG		
19OC04	R	09	-	-	-	12064971, 15317766, 15305306, 12160812, 12052466 & 12047767 - ADDED TERMINAL ID NOTE	264188	CTR	JVM	MKM		
13JA05	R	10	-	-	-	12047767 - UPDATED PDM ATTRIBUTES	262266	KAM	MDM	BDG		
17MR05	R	11	-	-	-	ALL ACTIVE PARTS - UPDATED PDM ATTRIBUTES	265692	AKJ	AKJ	BDG		
28AP05	R	12	-	-	-	12047767 - MAT'L SPEC WAS M3604159	267141	MDM	FRG	BDG		
21JL05	R	13	-	-	-	12047767 & 12064971 - CREATED NISSAN CUSTOMER PART DRAWING	269749	RTV	AUG	TAY		
27SC05	R	14				15317766, 15305306, 12160812, 12064971, 12052466 & 12047767 - ADDED EXCLUDING COIN TO DIM B	269136	RTV	VTG	MKM		
09MR06	R	15	-	-	-	12047767, 12052466 & 12064971 - UPDATED PDM ATTRIBUTES	276509	JBD	AUG	JES		
16JN06	R	16	-	-	-	ALL ACTIVE PARTS - PSD WAS #6 & DIM #2 WAS 2.45 MAX	281779	JTZ	JVM	BDG		
14OC08	R	17	-	-	-	13737252 - RELEASED	406418	RHG	JHP	RHG		
19MR09	R	18	-	-	-	ALL ACTIVE PARTS - UPDATED MAT'L CALLOUT	407590	LBD	DLG	DEM		
24AU12	R	19	-	-	-	13964351 & 13964643 - RELEASED	418326	KHD	JAA	RP		
01JA12	R	20	-	-	-	ALL AVAILABLE PARTS - ADDED "USED MATERIAL" NOTE	418407	KHD	JAA	RP		
13OC15	R	21	-	-	-	ADDED 12047767 & 12064971 CARRIER STRIP VIEW	438832	LTZ	SRH	HJJ		
27NO17	R	22	-	-	-	ALL ACTIVE PARTS - UPDATED PDM ATTRIBUTES	438425	KSL	JVM	LB		
15OC18	R	23	-	-	-	ALL ACTIVE PARTS - ADDED "UNSEALED" COLUMN ON CHART	441192	CDD	CDD	LES		

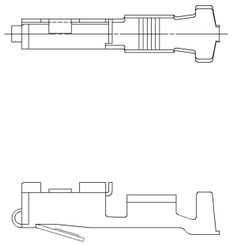

TYPE 102
SAME AS TYPE 101
EXCEPT AS SHOWN

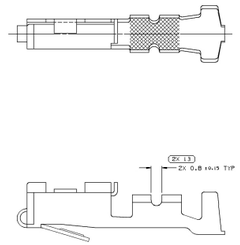

TYPE 103
SAME AS TYPE 101
EXCEPT AS SHOWN

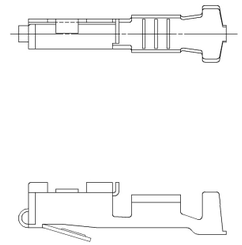

TYPE 104
SAME AS TYPE 101
EXCEPT AS SHOWN

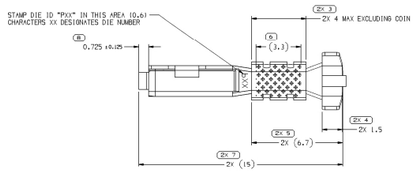

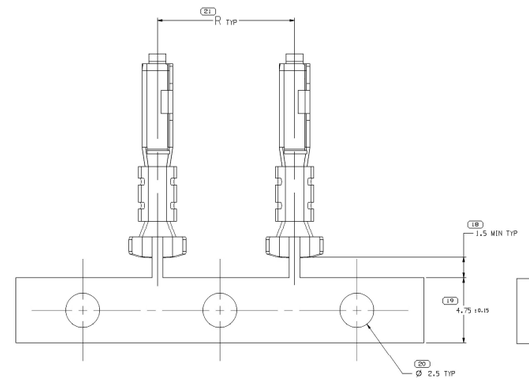

CARRIER STRIP VIEW

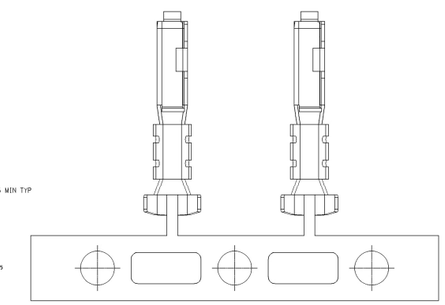

12047767 & 12064971
SAME AS OTHER CARRIER STRIP VIEW
EXCEPT AS SHOWN

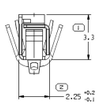

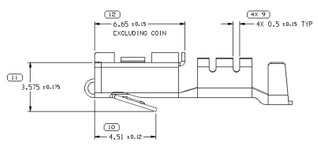

TYPE 101

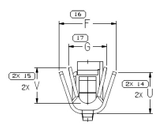

NOTES

1. UNLESS OTHERWISE SPECIFIED AND/OR INDICATED:

   DIMENSIONS ARE TO FACE OF VIEW SHOWN AND AUTOMATICALLY ROUNDED BY COMPUTER FOR INSPECTION. (SEE MATH MODEL FOR PRECISE DIMENSION) FOR ALL OTHER DIMENSIONS NOT SHOWN BUT REQUIRED FOR TOOL BUILD, SEE MATH MODEL FOR PRECISE TOOL PATH DATA.

2. TERMINAL ENGAGE IN TO ION TERMINAL DISENGAGE 1.5N TO BN WHEN MATED TO A 0.81 THICK X 1.5 WIDE HARDENED STEEL BLADE.

3. "PXX" INDICATES "P" PLUS LAST TWO DIGITS OF MAKE SERIES NUMBER (P01, P02, P03, ETC).

4. DO NOT PROBE, TEST OR OTHERWISE CONTACT THE INTERIOR REGION (THE SPRING OR ANY MOVING PART) OF THIS TERMINAL. SEVERE DAMAGE CAN OCCUR, COMPROMISING THE PERFORMANCE OF THE ELECTRICAL INTERFACE.

5. MATERIAL USED IS C654 - TIN PLATED SILICON BRONZE

				0.25 X 29		12964643	01	AC	RESTRICTED	SEE NOTE #5	1-0.8	17	2.4-1.7	101	4.2	2.8	10.08	3	2.6	X
-	-	-	-	0.25 X 29		13964351	01	AC	RESTRICTED	SEE NOTE #5	0.5-0.35	21	2.2-1.3	101	3.5	2.1	10.08	-	2.1	X
				0.25 X 29		13737252	01	AD		METAL COPPER ALLOY TIN PLATED	0.22-0.13	25	1.1-0.81	104	1.9±0.2	1.6±0.1.5	10.08	1.9	1.45	X
				0.25 X 29		15317766	03	AH	-	METAL COPPER ALLOY TIN PLATED	0.5-0.35	21	1.3-1.2	101	2.3	2.1	10.08	-	-	X
				0.25 X 29		15305306	03	AH	-	METAL COPPER ALLOY TIN PLATED	0.35-0.6	226	-	104	4.2	2.8	10.08	-	-	X
				0.25 X 29		12160812	03	AH	-	METAL COPPER ALLOY SELECTIVE GOLD PLATED	1-0.8-0.5	17	2.4-1.7	101	4.2	2.8	10.08	-	-	X
				0.25 X 29		12124232	B1	-	-	METAL COPPER ALLOY TIN PLATED	1-0.8	17	2.4-1.7	101	4.2	2.8	10.08	-	-	-
				0.25 X 29		12064971	06	AL	-	METAL COPPER ALLOY TIN PLATED	0.5-0.35	21	2.2-1.3	101	3.5	2.1	10.08	-	2.1	X
				0.25 X 29		12052466	07	AJ	-	METAL COPPER ALLOY TIN PLATED	0.2	24	1.2	104	2.6	1.5 ±0.1	10.08	-	-	X
				0.25 X 30.18		12048640	F2	-	-	METAL COPPER ALLOY TIN PLATED	1	16	2.64-2.48	103	4.7	3.6	10.08	-	-	-
			12047882	0.25 X 29	A2	12047767	11	AM	-	METAL COPPER ALLOY TIN PLATED	1-0.8	17	2.4-1.7	101	4.2	2.8	10.08	3	2.6	X
				0.25 X 30.18		12047882	F2	-	-	METAL COPPER ALLOY TIN PLATED	0.25	22	2-1.84	101	3.4	2.2	10.08	-	-	-
			PART NO	REV	N/P	MAT'L SIZE			MAT'L SPEC	PART NO	REV	N/P	RESTRICTED	MAT'L SPEC	SIZE (MM²)	ID	DIA			
UNPLATED										PLATED					CABLE			TYPE	F ±0.3	G ±0.2	R	(U)	(V)	UNSEALED

DRAWING NUMBER					
12047884					
SIZE	SCALE	FORMAT NO	SHEET NO	SITS	REV	N/P
A1x3	101	2 OF 2	1 OF 7	R	23	-

2 PROCESS SENSITIVE DIMENSION
DIMENSIONS ENCLOSED IN A INDICATE INTERNAL DIMENSIONS AND NO TOLERANCE IS REQUIRED FOR THESE DIMENSIONS.

NOMENCLATURE RANGE (MM)	CHART C
FROM 0	>-12
TO 12	

TOLERANCE UNLESS OTHERWISE SPECIFIED

	DIA	ANGLE
ANGULAR TOLERANCE ±2°		

REFERENCE

THIRD ANGLE PROJECTION

DO NOT SCALE

USE MATH DATA

NX

ALL DIMENSIONS ARE IN MILLIMETERS

2 PRINTED LINE DRAWN THROUGH 1 PART NUMBER INDICATES THAT PHYSICAL PARTS ARE NOT AVAILABLE FOR THIS PART.

PART NUMBERS THAT DO NOT HAVE A LINE PRESENT INDICATE THAT PHYSICAL PARTS ARE AVAILABLE FOR ORDERING.

CONTACT APTIV SALES TO ASSURE AVAILABILITY OF PARTS.

DWG TYPE	PART DRAWING
STYLE	
VOLUME (CM³)	SYSTEM EMM

UNLESS OTHERWISE SPECIFIED

THIS DOCUMENT IS IN ACCORDANCE WITH ASME Y14.5M-1994 TO ANSI/ASME Y14.5M-1994 DIMENSIONING AND TOLERANCING.
THE DRAWING ORIENTATION, SECTIONS AND PATTERNS OF FEATURES MAY BE SHOWN DEPARTED FROM ACTUAL OR SYSTEM REFERENCES.

MATERIAL
SEE CHART

SUBSTANCES OF CONCERN AND RECYCLED
CONTENT PER APTIV (EMAPSS)

DRAWING NAME
TAXI TERM F W/P 150 LOCKING LANCE

DRAWING NUMBER					
12047884					
SIZE	SCALE	FORMAT NO	SHEET NO	SITS	REV	N/P
A1x3	101	2 OF 2	1 OF 7	R	23	-

•APTIV•
CONNECTION SYSTEMS
WARREN, OH

COPYRIGHT (YRW) APTIV. ALL RIGHTS RESERVED.

THIS DRAWING IS THE PROPERTY OF APTIV AND CONTAINS APTIV CONFIDENTIAL INFORMATION. THE DRAWING MAY NOT BE COPIED OR USED FOR UTILIZATION OF THIS DRAWING OR ITS RELATED CAD MATH DATA, TO WELL AS COMMERCIALLY EXPLOITED, EXCEPT WITH WRITTEN PERMISSION OF APTIV. UNAUTHORIZED USE IS PROHIBITED.

		DATE
DR		
APD01	S. LIMON A.	26AUG00
APD02	FRANCISCO POPCA	26AUG00
APD03	T. DUTILE	26OCT00
APD04		
APD05		

SUBSTANCES OF CONCERN AND RECYCLED CONTENT PER APTIV (EMAPSS)

12047884

Drawn: 2019-Mar-19 10:07:00 EDT
Plot: 2019-Mar-19 10:07:00 EDT
Page: 1 of 1

X-ON Electronics

Largest Supplier of Electrical and Electronic Components

Click to view similar products for Automotive Connectors ***category:***

Click to view products by APTIV ***manufacturer:***

Other Similar products are found below :

003-018-000 60403001 60993906-B 629515004020001 M902-2131 M902-2161 72.330.1035.1 73.353.4028.0 F119300-B F166900 F258300-B F358300-B F407400 F444110 F487000 F509500B-B 827153-1 8N1515-32-24P 9-1326729-8 925474-1 928905-1 964562-4 968782-1 GT17SA-8DS-HU 98891-1012 98947-1016 12004475-L 12010290 12010309-B 12015454 12020219-B 12020308 12041318-B 12052225-L 12052466 12059125 12064869 12004327-B 12010503-B 12015308 12015384 12015909 1-21030-1 12041254 12041318 12047946-B 12047957 12047957-L 12059473 12066261