SYMBOL DEFINITION			MISSING NUMBERS
A DIMENSION WITHOUT AN INSPECTION REPORT SYMBOL (□) DOES NOT REQUIRE INSPECTION, IT MAY BE CONTROLLED ON AN INDIVIDUAL COMPONENT DRAWING.	TOTAL NO. OF SYMBOLS ON DRAWING	61	1-9,
	LAST NO. USED	194	

DRG STATUS					ZONE	REVISION HISTORY	AUTH	DR	APVD	APVD
DATE	STS	REV	N/P	CHG					1	2
050ED1	R	01	-	-		ALL PARTS - REVISED MAT'L SPEC AND ADDED LOGO AND MATERIAL RECYCLING CODE NOTES	218/98	HH	EDV	DMC
25JA02	R	02	-	-		ALL PARTS - PROCESS SENSITIVE DIMENSION WAS 34	220165	HH	EDV	DMC
21MR06	R	03	-	-		12564769 - MAT'L SPEC WAS M3929202	278614	JDA	FRG	PTP
04JA02	R	04	-	-		ALL PARTS - UPDATED PDM ATTRIBUTES	410411	MAB	MAB	GEW

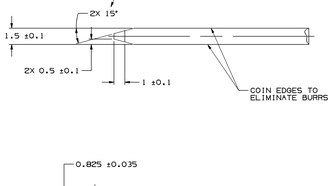

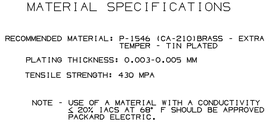

MATERIAL SPECIFICATIONS

RECOMMENDED MATERIAL: P-1546 (CA-210)BRASS - EXTRA SPRING TEMPER - TIN PLATED

PLATING THICKNESS: 0.003-0.005 MM

TENSILE STRENGTH: 430 MPA

NOTE - USE OF A MATERIAL WITH A CONDUCTIVITY < 200 IACS AT 68° F SHOULD BE APPROVED BY PACKARD ELECTRIC.

MATING TERMINAL INFORMATION

SCALE 8:1

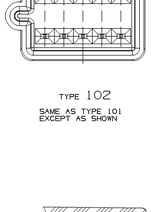

TYPE 102

SAME AS TYPE 101 EXCEPT AS SHOWN

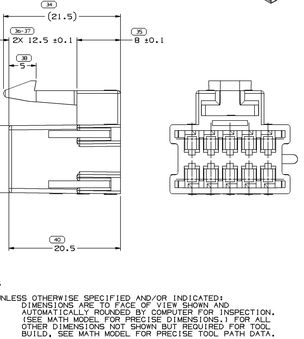

SECTION C-C

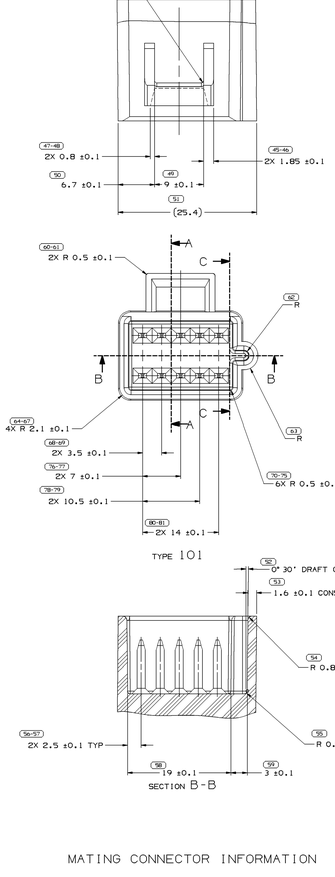

TYPE 101

SECTION B-B

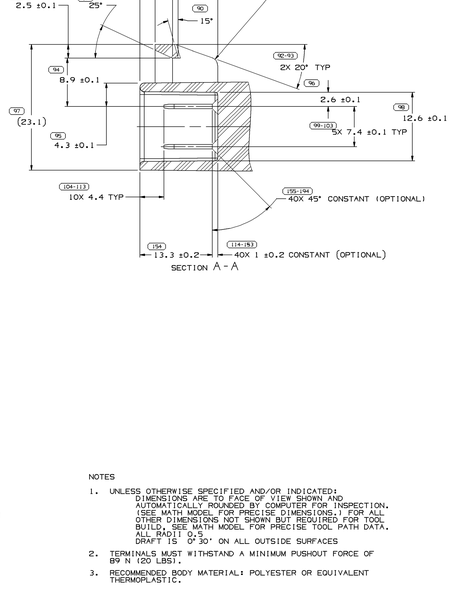

SECTION A-A

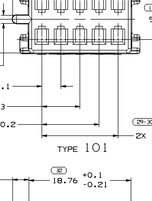

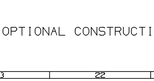

TYPE 102

SAME AS TYPE 101 EXCEPT AS SHOWN

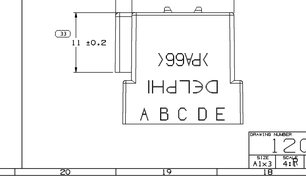

TYPE 101

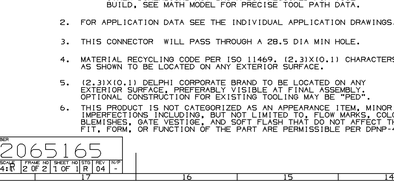

OPTIONAL CONSTRUCTION

NOTES

1. UNLESS OTHERWISE SPECIFIED AND/OR INDICATED:
   DIMENSIONS ARE TO FACE OF VIEW SHOWN AND AUTOMATICALLY ROUNDED BY COMPUTER FOR INSPECTION. (SEE MATH MODEL FOR PRECISE DIMENSIONS.) FOR ALL OTHER DIMENSIONS NOT SHOWN BUT REQUIRED FOR TOOL BUILD, SEE MATH MODEL FOR PRECISE TOOL PATH DATA.
2. FOR APPLICATION DATA SEE THE INDIVIDUAL APPLICATION DRAWINGS.
3. THIS CONNECTOR WILL PASS THROUGH A 28.5 DIA MIN HOLE.
4. MATERIAL RECYCLING CODE PER ISO 11469. (2.3)X(0.1) CHARACTERS AS SHOWN TO BE LOCATED ON ANY EXTERIOR SURFACE.
5. (2.3)X(0.1) DELPHI CORPORATE BRAND TO BE LOCATED ON ANY EXTERIOR SURFACE, PREFERABLY VISIBLE AT FINAL ASSEMBLY. OPTIONAL CONSTRUCTION FOR EXISTING TOOLING MAY BE "PED".
6. THIS PRODUCT IS NOT CATEGORIZED AS AN APPEARANCE ITEM, MINOR IMPERFECTIONS INCLUDING, BUT NOT LIMITED TO, FLOW MARKS, COLOR BLEMISHES, GATE VESTIGE, AND SOFT FLASH THAT DO NOT AFFECT THE FIT, FORM, OR FUNCTION OF THE PART ARE PERMISSIBLE PER DPNP-4.7-CS-01.

NOTES

1. UNLESS OTHERWISE SPECIFIED AND/OR INDICATED:
   DIMENSIONS ARE TO FACE OF VIEW SHOWN AND AUTOMATICALLY ROUNDED BY COMPUTER FOR INSPECTION. (SEE MATH MODEL FOR PRECISE DIMENSIONS.) FOR ALL OTHER DIMENSIONS NOT SHOWN BUT REQUIRED FOR TOOL BUILD, SEE MATH MODEL FOR PRECISE TOOL PATH DATA.
   ALL RADII 0.5
   DRAFT IS 0° 30' ON ALL OUTSIDE SURFACES
2. TERMINALS MUST WITHSTAND A MINIMUM PUSHOUT FORCE OF 89 N (20 LBS).
3. RECOMMENDED BODY MATERIAL: POLYESTER OR EQUIVALENT THERMOPLASTIC.
4. THIS PRODUCT IS NOT CATEGORIZED AS AN APPEARANCE ITEM, MINOR IMPERFECTIONS INCLUDING, BUT NOT LIMITED TO, FLOW MARKS, COLOR BLEMISHES, GATE VESTIGE, AND SOFT FLASH THAT DO NOT AFFECT THE FIT, FORM, OR FUNCTION OF THE PART ARE PERMISSIBLE PER DPNP-4.7-CS-01.

MATING CONNECTOR INFORMATION

PART NO	REV	N/P	TYPE	MATERIAL SPECIFICATION AND COLOR	MATING CONNECTOR	VOL CM³
15324054	A4	-	101	POLYAMIDE COMPOUND BLACK	15324056	3.265
12064877	C4	-	102	POLYAMIDE COMPOUND BLUE	12064872	3.265
12064769	D4	AA	101	POLYAMIDE COMPOUND CREAM	12064770	3.265

DIMENSIONAL RANGES (MM)											
FROM	0	3	30	60	90	120	150	200	250	300	400
TO	3	30	60	90	120	150	200	250	300	400	500
TOLERANCE UNLESS OTHERWISE SPECIFIED											
±0.13	±0.4	±0.8	±1.2	±1.6	±2.0	±2.5	±3.0	±3.5	±4.0	±4.5	±5.0

GENERAL TOLERANCE PER

40 PROCESS SENSITIVE DIMENSION

DIMENSION ENCLOSED IN ( ) INDICATE REFERENCE DIMENSION, NO 40 TOLERANCE LIMITS ARE ESTABLISHED

SCALE 2:1

THIRD ANGLE PROJECTION

DO NOT SCALE

USE MATH DATA

THIS DRAWING IS THE PROPERTY OF DELPHI DELPHI PACKARD ELECTRICAL/ELECTRONIC ARCHITECTURE DARROW, IN
COPYRIGHT 1997 DELPHI CORPORATION, HELM-FOR ITS AFFILIATES. ALL RIGHTS RESERVED.
THIS DRAWING IS THE PROPERTY OF DELPHI CORPORATION. THE REPRODUCTION OR DISCLOSURE TO THIRD PARTIES OF THIS DRAWING OR ANY PART THEREOF WITHOUT WRITTEN PERMISSION IS PROHIBITED.

DELPHI

DELPHI PACKARD ELECTRICAL/ELECTRONIC ARCHITECTURE
DARROW, IN

		DATE
DR		
APVD1	J. REEVES	24SEP97
APVD2	F. HESTON	25SEP97
APVD3	S. A. NORLING	08OCT97
APVD4		
APVD5		

SUBSTITUTES OF CONFORM AND PROTECTED CONTACT PER DELPHI (294902)

SCALE: SEE CHART

DRAWING NAME: TAXI CONN F M/P 150

DRAWING NUMBER: 12065165

SIZE A1x3 | SCALE 4:1 | SHEET 1 OF 2 | SHEET NO. 1 OF 1 | REV R | N/P 04

12065165

X-ON Electronics

Largest Supplier of Electrical and Electronic Components

Click to view similar products for Automotive Connectors ***category:***

Click to view products by APTIV ***manufacturer:***

Other Similar products are found below :

003-018-000 60993906-B M902-2131 M902-2161 M902-2344 72.330.1035.1 73.353.4028.0 F166900 F358300-B F407400 776880-1 827153-1 8N1515-32-24P 9-1326729-8 925474-1 928905-1 964562-4 968782-1 98891-1012 12004475-L 12020308 12041318-B 12052466 12064869 12015909 1-21030-1 12041254 12041318 12047946-B 12110546-B 12131792 12084688 12092346 HD34-18-14PT HD46-24-23SN-059 HDB36-24-16PN-059 HDP26-24-9SE-L015 12185280 12185550 12336-12 12191172-B 12S 13545280 13577943 13681974 13737722-B 13830674 13832576 13849772 13542772