THIS DRAWING AND DESIGN HEREON CONSTITUTES A PROPRIETARY DESIGN OF PACKARD ELECTRIC DIVISION AND IS NOT TO BE DUPLICATED OR REPRODUCED WITHOUT AUTHORITY OF PACKARD ELECTRIC DIVISION

DO NOT SCALE

PART NO 1209 2059

DATE	SYM	REVISION RECORD	AUTH	DR	CK
01NO91	—	REDRAWN TO LATEST			
		STANDARDS - REV			
		LEVEL REMAINS AT			
		"B"	144974	RKR	CK
24SE12	—	UPDATED PDM ATTRIBUTES			
		"B1"	419776	LES	AH

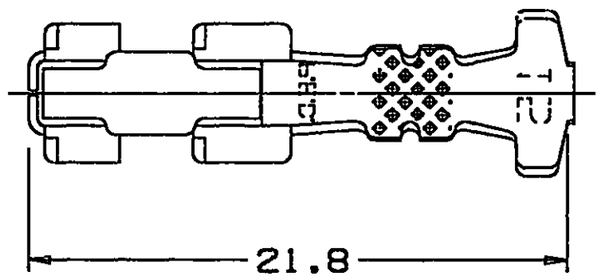

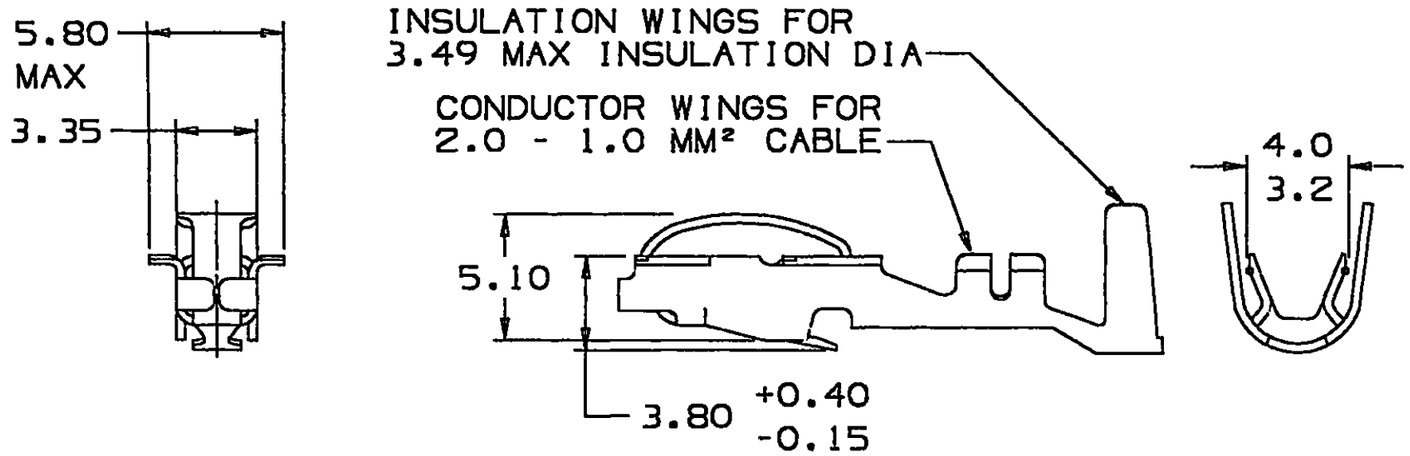

NOTES—1. THIS TERMINAL ACCEPTS 12015323 CABLE SEAL OR EQUIVALENT.
2. MATES TO LAMP SOCKET 12066688 OR EQUIVALENT.

Unigraphics II

THIRD ANGLE PROJECTION

METRIC

DIMENSIONS ARE IN MILLIMETERS UNLESS OTHERWISE SPECIFIED

TOLERANCE UNLESS OTHERWISE SPECIFIED
DECIMAL: ANGULAR ± 2°
ONE PLACE ± 0.3
TWO PLACE ± 0.15

CODE NO 6901	QC		
DWG DATE 28JL88		DR J.HOUGELMAN	28JL88
SCALE NONE		CK T.MUDREY	19AU88
REFERENCE NO 12092060"A0"SIZE		APPR P.REEDY	22AU88
		APPR T.E.GENT	22AU88

MATERIAL SPEC
0.36 THICK TIN BRASS - TIN PLATED

NAME
TERM LP SOC WGE BSE

PART NUMBER
1209 2059
OUTLINE DRAWING

SIZE A3

GENERAL MOTORS CORPORATION
WARREN, OHIO

X-ON Electronics

Largest Supplier of Electrical and Electronic Components

Click to view similar products for Automotive Connectors ***category:***

Click to view products by APTIV ***manufacturer:***

Other Similar products are found below :

003-018-000 60403001 60993906-B 629515004020001 M902-2131 M902-2161 72.330.1035.1 73.353.4028.0 F119300-B F166900 F258300-B F358300-B F407400 F444110 F487000 F509500B-B 827153-1 8N1515-32-24P 9-1326729-8 925474-1 928905-1 964562-4 968782-1 GT17SA-8DS-HU 98891-1012 98947-1016 12004475-L 12010290 12010309-B 12015454 12020219-B 12020308 12041318-B 12052225-L 12052466 12059125 12064869 12004327-B 12010503-B 12015308 12015384 12015909 1-21030-1 12041254 12041318 12047946-B 12047957 12047957-L 12059473 12066261