SYMBOL DEFINITION		MISSING SYMBOLS
A DIMENSION WITHOUT AN INSPECTION REPORT SYMBOL (□) DOES NOT REQUIRE INSPECTION. IT MAY BE CONTROLLED ON THE INDIVIDUAL COMPONENT DRAWING.	TOTAL NO OF INSPECTIONS REQUIRED 48	32 35-44
	LAST NO. USED 51	

DWG STATUS DATE	STA	REV	N/P	ZONE	REVISION HISTORY	AUTH	DR	APVD	APVD 2
21MY99	R	01	-	-	CLEARED REV COL & 15354670 - RELEASED	990205	AKS	RMM	EH
23AU99	R	02	-	-	15354670 - REVISED MAT'L SPEC	196609	KBD	KBD	EJH
13SE99	R	03	-	-	15354670 - REVISED MAT'L SPEC	196680	MAC	MAC	EJH
06DC99	R	04	-	-	15354670 - CORRECTED REVISION LEVEL	197402	MAC	MAC	EJH
26JA00	R	05	-	-	15354670 - UPDATED PDM ATTRIBUTES	198517	MAB	MAB	EJH
10AU01	R	06	-	-	15418340 - RELEASED, 12103514-16 ADDED "TYPE" COLUMN TO CHART	212649	EES	JLD	RAP
26AR04	R	07	-	-	ALL PARTS - REVISED "*" REFERENCE TO NOTE 2	253370	CCV	JAA	RAP
24AU05	R	08	-	-	13539139 - RELEASED; ALL PARTS - REVISED MAT'L SPEC TO LATEST M-SPEC STANDARD	271323	RH	RH	WM
12AP07	R	09	-	-	13629796 - RELEASED	401003	GE	GE	SM
17SE07	R	10	-	-	UPDATED PDM ATTRIBUTES	402377	WM	WM	MCR

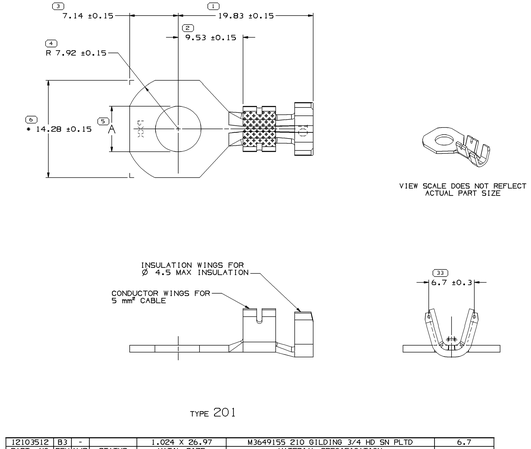

TYPE 201

PART NO	REV	N/P	STATUS	MAT'L SIZE	MATERIAL SPECIFICATION	Ø A ±0.1
12103512	B3	-		1.024 X 26.97	M39649155 210 GILDING 3/4 HD SN PLTD	6.7
PLATED						

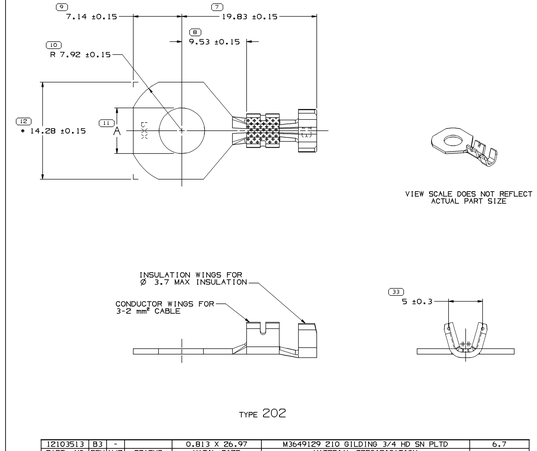

TYPE 202

PART NO	REV	N/P	STATUS	MAT'L SIZE	MATERIAL SPECIFICATION	Ø A ±0.1
12103513	B3	-		0.813 X 26.97	M39649129 210 GILDING 3/4 HD SN PLTD	6.7
PLATED						

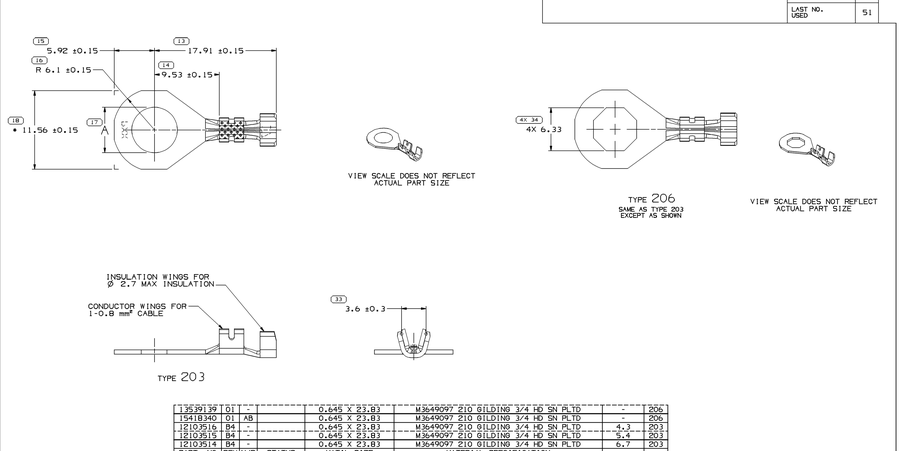

TYPE 203

PART NO	REV	N/P	STATUS	MAT'L SIZE	MATERIAL SPECIFICATION	Ø A ±0.1	TYPE
13539139	01	-		0.645 X 23.83	M39649097 210 GILDING 3/4 HD SN PLTD	-	206
15418340	01	AB		0.645 X 23.83	M39649097 210 GILDING 3/4 HD SN PLTD	-	206
12103516	B4	-		0.645 X 23.83	M39649097 210 GILDING 3/4 HD SN PLTD	4.3	203
12103515	B4	-		0.645 X 23.83	M39649097 210 GILDING 3/4 HD SN PLTD	5.4	203
12103514	B4	-		0.645 X 23.83	M39649097 210 GILDING 3/4 HD SN PLTD	6.7	203
PLATED							

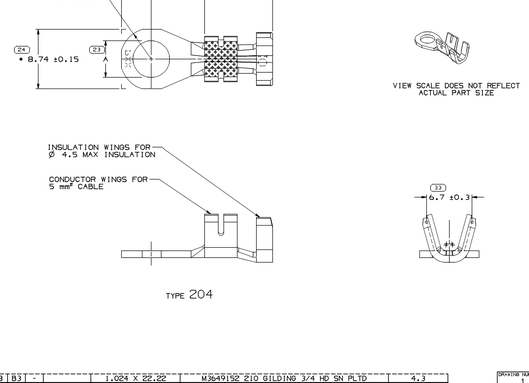

TYPE 204

PART NO	REV	N/P	STATUS	MAT'L SIZE	MATERIAL SPECIFICATION	Ø A ±0.1
12103518	B3	-		1.024 X 22.22	M39649152 210 GILDING 3/4 HD SN PLTD	4.3
12103517	B3	-		1.024 X 22.22	M39649152 210 GILDING 3/4 HD SN PLTD	5.4
PLATED						

DRAWING NUMBER 12103500
SIZE A1x3 | SCALE 5:1 | PAGE 2 OF 2 | SHEET 2 OF 2 | REV R | 10 | SCP -

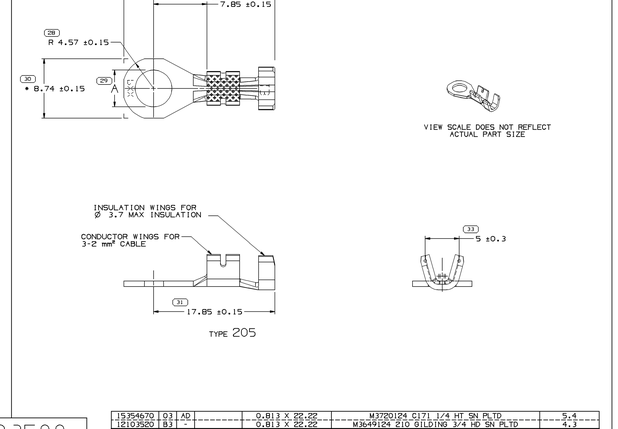

TYPE 205

PART NO	REV	N/P	STATUS	MAT'L SIZE	MATERIAL SPECIFICATION	Ø A ±0.1
15354670	03	AD		0.813 X 22.22	M37201214 C171 1/4 HT SN PLTD	5.4
12103520	B3	-		0.813 X 22.22	M39649124 210 GILDING 3/4 HD SN PLTD	4.3
12103519	B3	-		0.813 X 22.22	M39649124 210 GILDING 3/4 HD SN PLTD	5.4
PLATED						

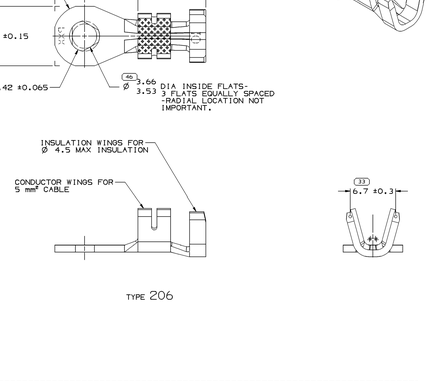

TYPE 206

PART NO	REV	N/P	STATUS	MAT'L SIZE	MATERIAL SPECIFICATION	Ø A ±0.1
13629796	01	AA		1.024 X 22.22	M39649152 210 GILDING 3/4 HD SN PLTD	
PLATED						

NOTES

1. UNLESS OTHERWISE SPECIFIED AND/OR INDICATED:
   DIMENSIONS ARE TO FACE OF VIEW SHOWN AND AUTOMATICALLY ROUNDED BY COMPUTER FOR INSPECTION. (SEE MATH MODEL FOR PRECISE DIMENSIONS.) FOR ALL OTHER DIMENSIONS NOT SHOWN BUT REQUIRED FOR TOOL BUILD, SEE MATH MODEL FOR PRECISE TOOL PATH DATA.
2. "*" INDICATES DIMENSIONS MADE AT CUT-OFF AND CRIMP DIE.
3. TYPE 206, PN 13629796 UTILIZES FEATURE TO RETAIN SCREW OF M4-0.7mm OR EQUIVALENT.

4.3	M4	#8
5.4	M5	#10
6.7	M6	1/4"
Ø A	METRIC	STANDARD
SCREW SIZE		

(33) PROCESS SENSITIVE DIMENSION

DIMENSIONS ENCLOSED IN () INDICATE REFERENCE DIMENSION AND NO TOLERANCE (STATED AND EXTRA CHARS)

DIMENSIONAL TOLERANCE (UNL)	DECIMAL PLACES
FRACTION ±1/64	
DECIMAL ±0.01	±0.12
TOLERANCE UNLESS OTHERWISE SPECIFIED	
ANGULAR TOLERANCE ±0°	

THIRD ANGLE PROJECTION

DO NOT SCALE

USE MATH DATA

PART DRAWING

UNLESS OTHERWISE SPECIFIED

THIS DOCUMENT IS IN ACCORDANCE WITH ASME Y14.5M-1994 AS IMPLEMENTED BY THE DELPHI DIMENSIONING STANDARDS DOCUMENT, DEC-DS-1, DEC-DS-2, DEC-DS-3 (DEC-DS-PRINCIPLES AND RELATED SYSTEMS WHEN I APPLY). THIS IS A DIMENSIONAL PRINCIPLES DRAWING. THE DEFINITION OF THE PRODUCT DEPICTED HEREIN IS DEFINED BY THE DIMENSIONS AND SPECIFICATIONS OF LOCATION TOLERANCES, FORM TOLERANCES, AND ANGULARITY TOLERANCES. THE DEVELOPMENT OF FIXTURE REFERENCE(S) AND DATUMS REPRESENTS A DIFFERENT DOCUMENT. ALL DIMENSIONS ARE IN MILLIMETERS

REFERENCE

DELPHI

DELPHI PACKARD ELECTRICAL/ELECTRONIC ARCHITECTURE WARREN, OH

		DATE
DR		
APVD1	S. LIMON A.	08JA97
APVD2	R. RAMOS S.	08JA97
APVD3	ROBERT LAIRD	01MY97
APVD4		
APVD5		

SUBSTANCES OF CONCERN: NO RECYCLED CONTENT PER DELPHI (29490)

MATERIAL: SEE CHART

DRAWING NAME: TAXI TERM RING

DRAWING NUMBER: 12103500

SIZE A1x3 | SCALE 5:1 | PAGE 1 OF 2 | SHEET 1 OF 2 | REV R | 10 | SCP -

ISI 03200

X-ON Electronics

Largest Supplier of Electrical and Electronic Components

Click to view similar products for Automotive Connectors ***category:***

Click to view products by APTIV ***manufacturer:***

Other Similar products are found below :

003-018-000 60403001 60993906-B 629515004020001 M902-2131 M902-2161 72.330.1035.1 73.353.4028.0 F119300-B F166900 F258300-B F358300-B F407400 F444110 F487000 F509500B-B 827153-1 8N1515-32-24P 9-1326729-8 925474-1 928905-1 964562-4 968782-1 GT17SA-8DS-HU 98891-1012 98947-1016 12004475-L 12010290 12010309-B 12015454 12020219-B 12020308 12041318-B 12052225-L 12052466 12059125 12064869 12004327-B 12010503-B 12015308 12015384 12015909 1-21030-1 12041254 12041318 12047946-B 12047957 12047957-L 12059473 12066261