SYMBOL DEFINITION		
A DIMENSION WITHOUT AN INSPECTION REPORT SYMBOL (□) DOES NOT REQUIRE INSPECTION. IT MAY BE CONTROLLED ON THE INDIVIDUAL COMPONENT DRAWING.	TOTAL NO OF INSPECTIONS REQUIRED	129
	LAST NO. USED	38

MISSING SYMBOLS
NO MISSING SYMBOL NUMBER

DWG STATUS					ZONE	REVISION HISTORY	AUTH	DR	APVD	APVD
DATE	SCN	REV	N/P	CHG					1	2
25JA05	R	01	AB	-		CLEARED REVISION COLUMN, REDRAWN TO PD AND DIM ZX (240) TYP WAS 240	26JB77	CCB	AUG	GD

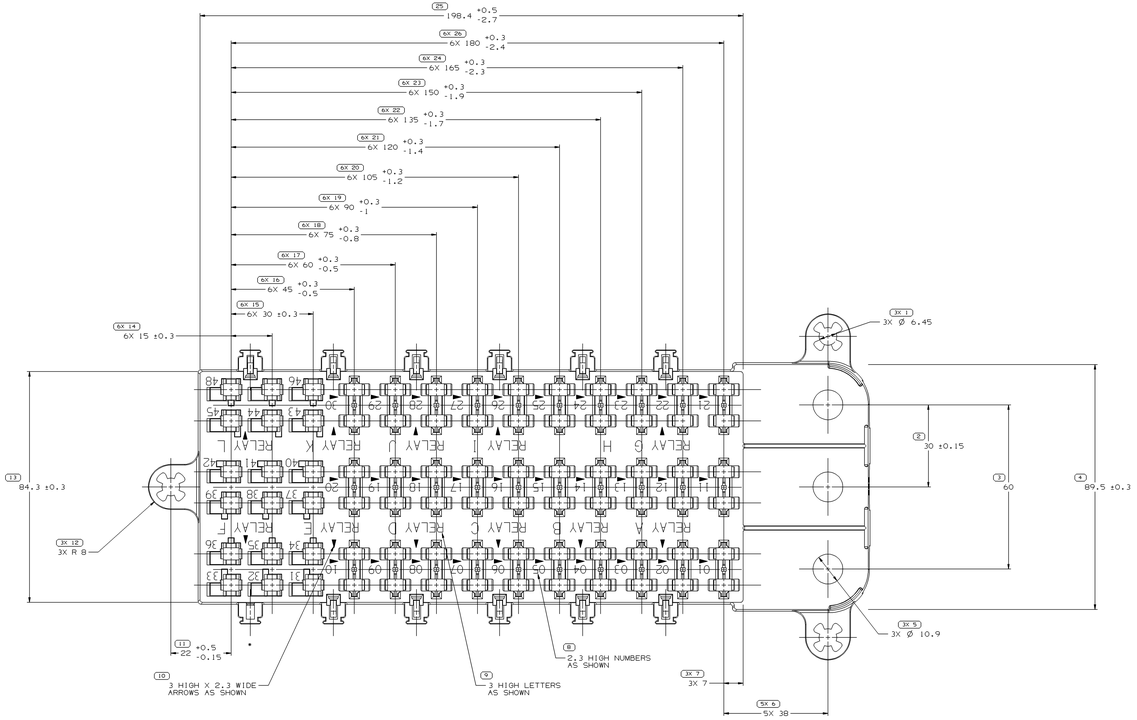

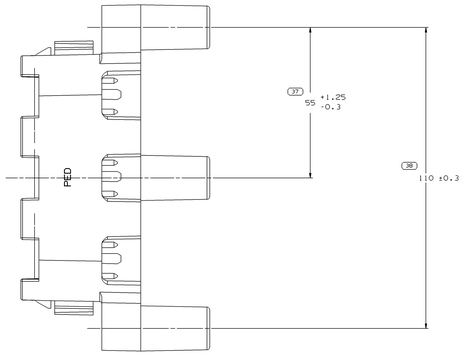

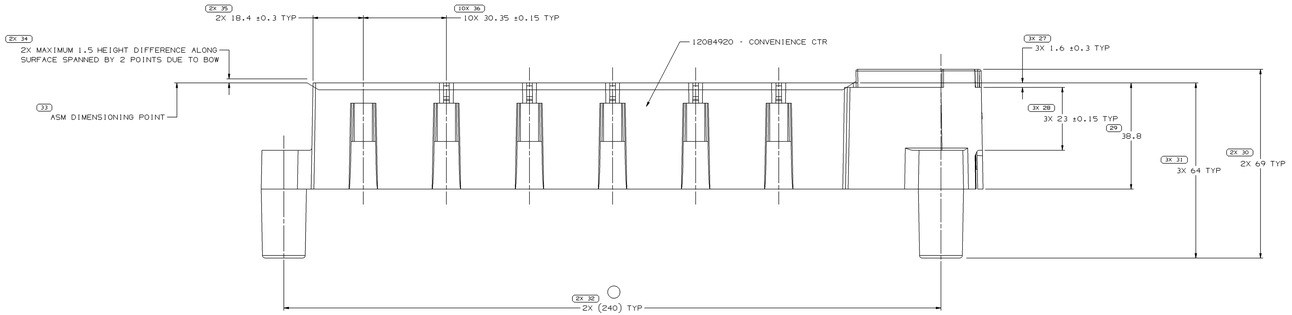

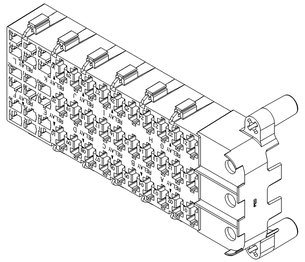

NOTES

1. UNLESS OTHERWISE SPECIFIED AND/OR INDICATED:

   DIMENSIONS ARE TO FACE OF VIEW SHOWN AND AUTOMATICALLY ROUNDED BY COMPUTER FOR INSPECTION (SEE MATH MODEL FOR PRECISE DIMENSIONS). FOR ALL OTHER DIMENSIONS NOT SHOWN BUT REQUIRED FOR TOOL BUILD, SEE MATH MODEL FOR PRECISE TOOL PATH DATA.

2. SEALING CODE 0 - UNSEALED
3. THIS PART IS NOT CONTROLLED FOR AUTOMATIC FEEDING.
4. THIS PART ACCEPTS THE FOLLOWING COMPONENTS OR EQUIVALENT:

   FUSE TERMINAL 12020337
   ACCESORY TERMINAL 12004563
   AUTOFUSE 12004008
   RELAY CONNECTOR 12033871

5. * INDICATES THAT THIS MOUNTING RAIL DOES NOT CONTAIN A LOCKING FEATURE, AND SHOULD NOT BE USED FOR A SINGLE RELAY CONNECTOR MAY BE USED WHEN USING TWO OR MORE CONSECUTIVE RELAY CONNECTORS.
6. SURFACES TO HAVE A E.D.M. FINISH WITH A ROUGHNESS AVERAGE (RA) BETWEEN 6.3 - 9 MM (250 - 360 MIN). (MM:MICROMETERS, MIN:MICROINCHES).

DRAWING NUMBER							
12110138							
SIZE	SCALE	FRAME NO	SHEET NO	STG	REV	N/P	
A1x3	2:1	2 OF 2	1 OF 1	R	01	AB	

30 PROCESS SENSITIVE DIMENSION

DIMENSIONS ENCLOSED IN A PARENTHESIS REFERENCE DIMENSIONS AND NO TOLERANCE LIMITS ARE ESTABLISHED.

DIMENSIONAL RANGE (MM)									
0	3	6	30	120	>100	>200	>300	>400
TOL	±0.3	±0.5	±0.8	±1.2	±1.9	±2.3	±2.8	±3.3
				100	200	300	400	500

TOLERANCE UNLESS OTHERWISE SPECIFIED:
1±0.15 | 2±0.3 | 3±0.5 | 4±0.8 | 5±0.8 | 6±1 | 7±1.2
ANGULAR TOLERANCE ±2°

THIRD ANGLE PROJECTION

DO NOT SCALE

USE MATH DATA

PART TYPE	
STYLE	PART DRAWING
VOLUME (CM³) SEE DWG	SYSTEM CODE

UNLESS OTHERWISE SPECIFIED
THIS DOCUMENT IS IN ACCORDANCE WITH ASME Y14.5M-1994 UNLESS OTHERWISE SPECIFIED. DIMENSIONS ARE TO FOLLOWING MINIMUM DATA. SEPARATE PATTERNS OF FEATURES MAY BE SHARED SEPARATELY REGARDLESS OF DATUM REFERENCE.

ALL DIMENSIONS ARE IN MILLIMETERS

REFERENCE

DELPHI
DELPHI PACKARD ELECTRIC SYSTEMS
WARREN, OH

	DATE
DR	
APVD1 BARBARA RUBERTO	02MP00
APVD2 J. ZAMUDIO	18JA01
APVD3 J. HORIUCH	18JA01
APVD4	
APVD5	

SUBSTANCES OF CONCERN AND RECYCLED CONTENT PER DELPHI (09490G)

MATERIAL: SEE DRAWING

DRAWING NAME
ASM CENT CONV CTR BLK PRINTED

DRAWING NUMBER							
12110138							
SIZE	SCALE	FRAME NO	SHEET NO	STG	REV	N/P	
A1x3	2:1	1 OF 2	1 OF 1	R	01	AB	

12110138

X-ON Electronics

Largest Supplier of Electrical and Electronic Components

Click to view similar products for Automotive Connectors ***category:***

Click to view products by APTIV ***manufacturer:***

Other Similar products are found below :

003-018-000 60403001 60993906-B 629515004020001 M902-2131 M902-2161 72.330.1035.1 73.353.4028.0 F119300-B F166900 F258300-B F358300-B F407400 F444110 F487000 F509500B-B 827153-1 8N1515-32-24P 9-1326729-8 925474-1 928905-1 964562-4 968782-1 GT17SA-8DS-HU 98891-1012 98947-1016 12004475-L 12010290 12010309-B 12015454 12020219-B 12020308 12041318-B 12052225-L 12052466 12059125 12064869 12004327-B 12010503-B 12015308 12015384 12015909 1-21030-1 12041254 12041318 12047946-B 12047957 12047957-L 12059473 12066261