SYMBOL DEFINITION			MISSING SYMBOLS
A DIMENSION WITHOUT AN INSPECTION REPORT SYMBOL (▭) DOES NOT REQUIRE INSPECTION. IT MAY BE CONTROLLED ON THE INDIVIDUAL COMPONENT DRAWING.	TOTAL NO OF INSPECTIONS REQUIRED	70	NO MISSING SYMBOL NUMBER
	LAST NO. USED	33	

CHG STATUS					ZONE	REVISION HISTORY	AUTH	DR	APVD	APVD
DATE	STA	RD	PVP	CHG						21
27M109	R	C4	-	-		REDRAWN TO PD AND DIM 17.42+0.25/-.015 WAS 17.42+/-.015 13 PLCS!	498106	WFG	CCB	APP

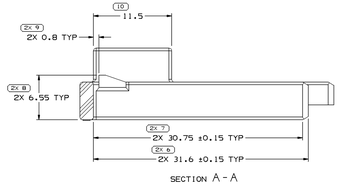

SECTION A-A

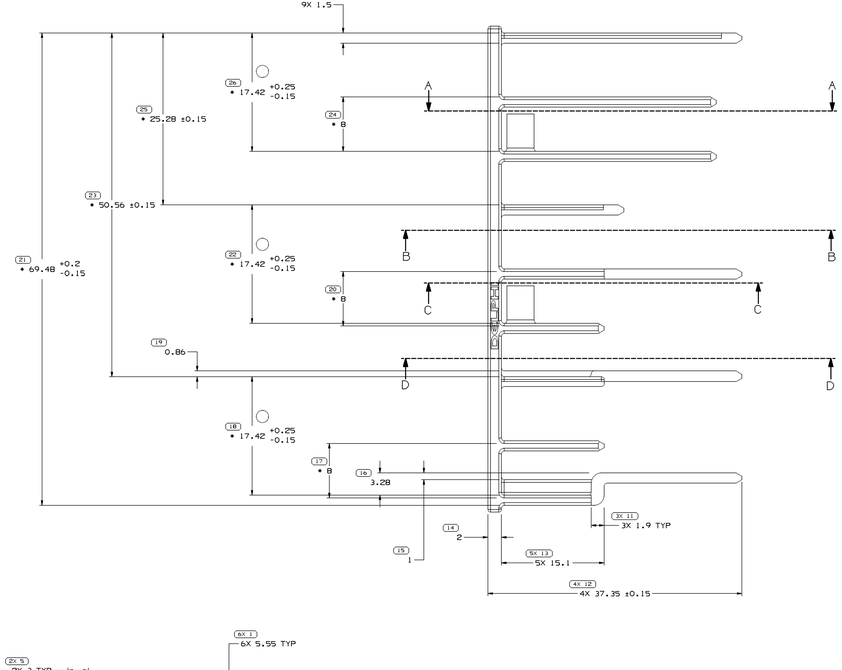

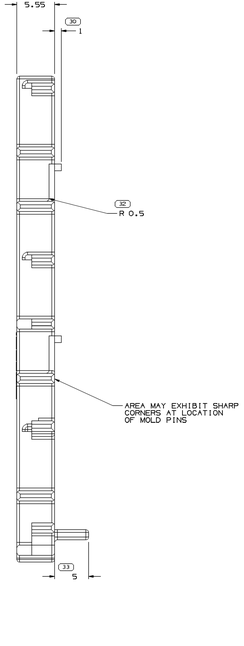

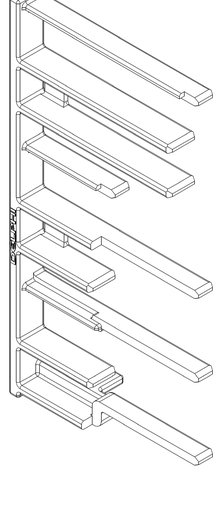

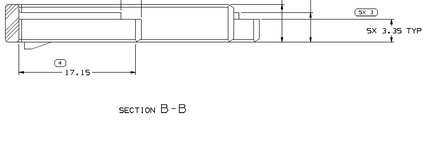

SECTION B-B

SECTION C-C

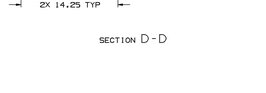

SECTION D-D

NOTES

1. UNLESS OTHERWISE SPECIFIED AND/OR INDICATED:

   DIMENSIONS ARE TO FACE OF VIEW SHOWN AND AUTOMATICALLY ROUNDED BY COMPUTER FOR INSPECTION (SEE MATH MODEL FOR PRECISE DIMENSIONS). FOR ALL OTHER DIMENSIONS NOT SHOWN BUT REQUIRED FOR TOOL BUILD, SEE MATH MODEL FOR PRECISE TOOL PATH DATA.

2. MATERIAL RECYCLING CODE PER ISO 11469, 11.3(X10.1) CHARACTERS AS SHOWN TO BE LOCATED ON ANY EXTERIOR SURFACE. OPTIONAL CONSTRUCTION TO BE NO MATERIAL RECYCLING CODE.

3. THIS PRODUCT IS NOT CATEGORIZED AS AN APPEARANCE ITEM. MINOR IMPERFECTIONS INCLUDING, BUT NOT LIMITED TO, FLOW MARKS, COLOR BLEMISHES, GATE VESTIGE, AND SOFT FLASH THAT DO NOT AFFECT THE FIT, FORM, OR FUNCTION OF THE PART ARE PERMISSIBLE PER DPNP-4.7-CS-01.

4. THIS PART IS NOT CONTROLLED FOR AUTOMATIC FEEDING.

5. REFERENCE MATING COMPONENTS OR EQUIVALENT:

   CONV CTR 12110594

6. (1.3X(0.1) DELPHI CORPORATE BRAND TO BE LOCATED ON ANY EXTERIOR SURFACE, PREFERABLY VISIBLE AT FINAL ASSEMBLY. OPTIONAL CONSTRUCTION FOR EXISTING TOOLING MAY BE "PRED".

7. • DENOTES DIMENSIONS TO BE MEASURED AT BASE OF PARTH WITH BASED HEL IN FLAT, STRAIGHT POSITION.

DIMENSIONAL RANGE (MM)								
FROM	0	3	30	6	30	100	300	600
TO	3	30	6	30	100	300	600	1000
TOLERANCE UNLESS OTHERWISE SPECIFIED								
(±0.15)	(±0.2)	(±0.3)	(±0.5)	(±0.8)	(±1.2)	(±2)	(±3)	(±4)
ANGULAR TOLERANCE ±2°								

SYMBOL DEFINITION	
(21)	PROCESS SENSITIVE DIMENSION
DIMENSIONS ENCLOSED IN ( ) INDICATE REFERENCE DIMENSIONS AND HAVE NO TOLERANCE LIMITS AND ESTABLISHED	

DO NOT SCALE

THIRD ANGLE PROJECTION

SEE MATH DATA

NX

DWG TYPE	PART DRAWING
STYLE	
VOLUME (CU)	2.68b
SIZE	D
SYSTEM CODE	

UNLESS OTHERWISE SPECIFIED

THIS DRAWING IS IN ACCORDANCE WITH ASME Y14.5M-1994 AS MODIFIED BY THE GLOBAL DIMENSIONING AND TOLERANCING STANDARD (GDTS) AND THE DEFINITION OF FEATURES BY METHODS SEPARATELY ESTABLISHED BY SYTAX REFERENCE.

ALL DIMENSIONS ARE IN MILLIMETERS

REFERENCE

DELPHI

DELPHI PACKARD ELECTRICAL/ELECTRONIC ARCHITECTURE WARREN, OH

		DATE
DR	PATRICK S. KIRALY	21JN90
APVD1	BARBARA RUBERTO	07DC90
APVD2	JOSEPH LITTLE	07DC90
APVD3	R. A. PETROSKY	07DC90
APVD4		

SUBSTANCES OF CONCERN HAS RECYCLED CONTENT PER DELPHI (DPNP02).

MATERIAL: POLYAMIDE COMPOUND BLUE

DRAWING NAME: LOCK SECONDARY COMB

DRAWING NUMBER: 12110595

SIZE	SCALE	IMAGE NO	SHEET NO	TOTAL	REV	APP
A1x3	5:1	1 OF 2	1 OF 1	R	C4	-

DRAWING NUMBER: 12110595

SIZE	SCALE	IMAGE NO	SHEET NO	TOTAL	REV	APP
A1x3	5:1	2 OF 2	1 OF 1	R	C4	-

ISI 10262

X-ON Electronics

Largest Supplier of Electrical and Electronic Components

Click to view similar products for Automotive Connectors ***category:***

Click to view products by APTIV ***manufacturer:***

Other Similar products are found below :

003-018-000 60403001 60993906-B 629515004020001 M902-2131 M902-2161 72.330.1035.1 73.353.4028.0 F119300-B F166900 F258300-B F358300-B F407400 F444110 F487000 F509500B-B 827153-1 8N1515-32-24P 9-1326729-8 925474-1 928905-1 964562-4 968782-1 GT17SA-8DS-HU 98891-1012 98947-1016 12004475-L 12010290 12010309-B 12015454 12020219-B 12020308 12041318-B 12052225-L 12052466 12059125 12064869 12004327-B 12010503-B 12015308 12015384 12015909 1-21030-1 12041254 12041318 12047946-B 12047957 12047957-L 12059473 12066261