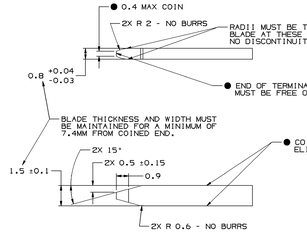


## MATERIAL SPECIFICATIONS

RECOMMENDED

BASE METAL - CDA-210, EXTRA SPRING TEMPER

- TIN PLATING (WHERE APPLICABLE TO 125°C MAX CONTINUOUS USAGE): 0.0050-0.0025 MM (200-100 µIN) ELECTROPLATED TIN.
- USAGE OF PLATING TYPES OTHER THAN RECOMMENDED MUST BE APPROVED BY DELPHI PACKARD ELECTRIC SYSTEMS ENGINEERING.

MINIMUMS

ELECTRICAL CONDUCTIVITY - >28% IACS AT 20 °C. USE OF A MATERIAL WITH CONDUCTIVITY <28% IACS MUST BE APPROVED BY PACKARD ELECTRIC MATERIALS ENGINEERING.

TENSILE STRENGTH - 430 - 480 MPa

UNDERPLATING FOR TIN PLATING - FOR BASE MATERIALS CONTAINING 10% OR MORE ZINC, AN UNDERPLATE OF COPPER 0.0025 MM (100 µIN) MINIMUM THICK IS REQUIRED.

PROCESSING LUBRICANT - ANY PROCESSING LUBRICANT REMAINING ON TERMINALS MUST NOT VARNISH OR DEGRADE THE ELECTRICAL PERFORMANCE OF THE CONNECTION UP TO A MAXIMUM TEMPERATURE OF 150°C. PROCESSING LUBRICANTS MUST BE APPROVED BY DELPHI PACKARD ELECTRIC SYSTEMS ENGINEERING.

## MATING BLADE INFORMATION

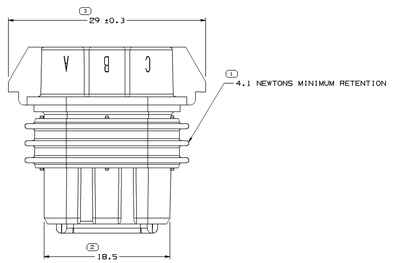


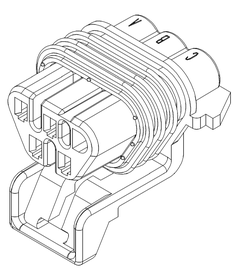

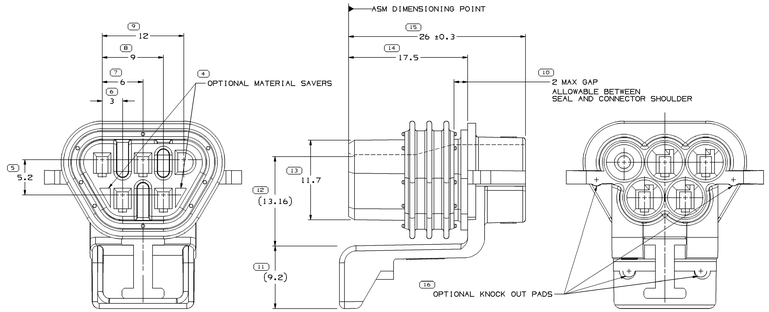


TYPE 101

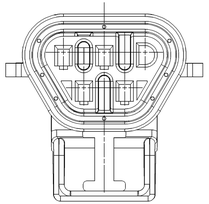

TYPE 102
SAME AS TYPE 101
EXCEPT AS SHOWN

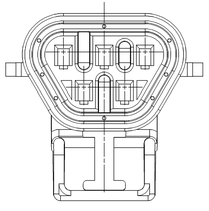

TYPE 103
SAME AS TYPE 101
EXCEPT AS SHOWN

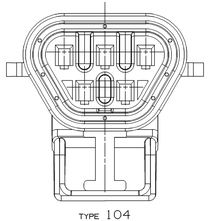

TYPE 104
SAME AS TYPE 103
EXCEPT AS SHOWN

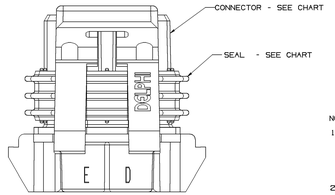


NOTES

1. UNLESS OTHERWISE SPECIFIED AND/OR INDICATED:

   DIMENSIONS ARE TO FACE OF VIEW SHOWN AND AUTOMATICALLY ROUNDED BY COMPUTER FOR INSPECTION (SEE MATH MODEL FOR PRECISE DIMENSIONS). FOR ALL OTHER DIMENSIONS NOT SHOWN BUT REQUIRED FOR TOOL BUILD, SEE MATH MODEL FOR PRECISE TOOL PATH DATA.

2. WHEN PARTS ARE SHIPPED THEY MUST BE PACKED IN PLASTIC BAGS OR SHIPPING CONTAINERS MUST BE LINED WITH PLASTIC LINERS. BAGS OR LINERS MUST BE SEALED TO AVOID FOREIGN MATTER.

3. SEALING CODE 3 - DESIGN WILL PASS SALT FOG AND IMMERSION TEST AFTER CONDITIONING AS SPECIFIED IN ESA-644 (WEATHER-PACK), ESA-710 (METRI-PACK), ESA-650 (UNDERHOOD MICRO-PACK), C-4006 (WORLD CONNECTOR), ETC WHEN MATED TO MATING PART OR EQUIVALENT

4. MAXIMUM CABLE DIAMETER 2.8 MM.

5. THIS PRODUCT IS NOT CATEGORIZED AS AN APPEARANCE ITEM. MINOR IMPERFECTIONS INCLUDING, BUT NOT LIMITED TO, FLOW MARKS, COLOR BLEMISHES, GATE VESTIGE, AND SOFT FLASH THAT DO NOT AFFECT THE FIT, FORM, OR FUNCTION OF THE PART ARE PERMISSIBLE PER DRNP-4.7-CS-01.

6. FOR APPLICATION DATA SEE THE INDIVIDUAL APPLICATION DRAWINGS.

| PART NO | REV | N/P | STATUS | CAVITY BLOCKED | TYPE | CONNECTOR | SEAL | REPLACEMENT P/N |
|---|---|---|---|---|---|---|---|---|
| 12146047 | A2 | - | - | C | 101 | 12146044 NYLON 66 BLACK | 12092843 | - |
| 12146046 | A2 | - | - | C | 102 | 12146043 NYLON 66 MED GRAY | 12092843 | - |
| 12146045 | A3 | - | - | NONE | 104 | 12146042 NYLON 66 CRM | 12092843 | - |
| 12124032 | B | - | OBSOLETE | NONE | 103 | 12103967 NYLON 6 BLUE | 12092843 | 12146045 |
| 12124011 | B | - | OBSOLETE | NONE | 104 | 12103973 NYLON 6 NAT | 12092843 | 12146045 |
| 12092842 | C | - | OBSOLETE | C | 102 | 12092838 NYLON 6 MED GRAY | 12092843 | 12146046 |
| 12092841 | C | - | OBSOLETE | C | 101 | 12092837 NYLON 6 BLACK | 12092843 | 12146047 |

| DRAWING NUMBER | | | | | |
|---|---|---|---|---|---|
| 12092848 | | | | | |
| SIZE | SCALE | SHEET NO | SHEET NO | REV | N/P |
| A1x3 | 5:1 | 2 OF 2 | 1 OF 1 | R | 03 - |

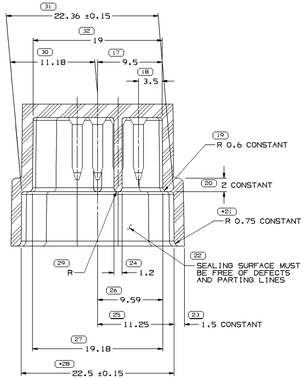


SECTION A-A

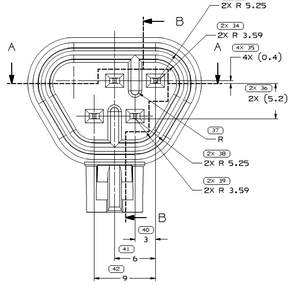


TYPE 101

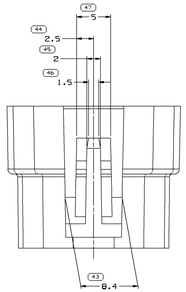


| DIMENSION NUMBER | TOOL BUILD TOLERANCE |
|---|---|
| 78 | ±0.24 |
| 72 | ±0.12 |
| 65 | ±0.12 |
| 63 | ±0.12 |
| 28 | ±0.12 |
| 21 | ±0.12 |

| SYMBOL DEFINITION | | MISSING SYMBOLS |
|---|---|---|
| A DIMENSION WITHOUT AN INSPECTION REPORT SYMBOL [ ] DOES NOT REQUIRE INSPECTION. IT MAY BE CONTROLLED ON THE INDIVIDUAL COMPONENT DRAWING. | TOTAL NO OF INSPECTIONS REQUIRED: 89 | NO MISSING SYMBOL NUMBER |
| | LAST NO. USED: 80 | |

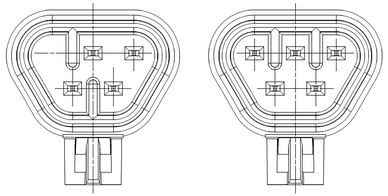

TYPE 102
SAME AS TYPE 101
EXCEPT AS SHOWN

TYPE 104
SAME AS TYPE 103
EXCEPT AS SHOWN

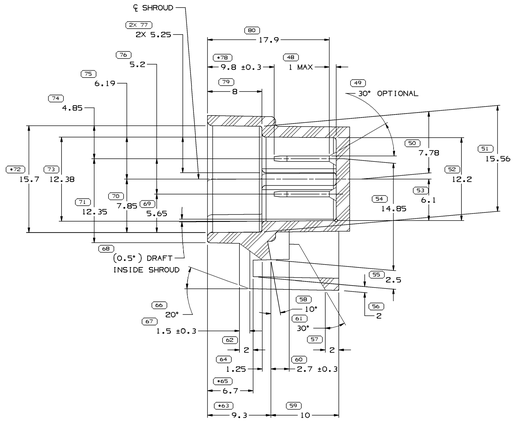


SECTION B-B

NOTES

1. UNLESS OTHERWISE SPECIFIED AND/OR INDICATED:

   DIMENSIONS ARE TO FACE OF VIEW SHOWN AND AUTOMATICALLY ROUNDED BY COMPUTER FOR INSPECTION (SEE MATH MODEL FOR PRECISE DIMENSIONS). FOR ALL OTHER DIMENSIONS NOT SHOWN BUT REQUIRED FOR TOOL BUILD, SEE MATH MODEL FOR PRECISE TOOL PATH DATA.
   ALL RADII 0.4
   DRAFT IS 1° MAX ON ALL OUTSIDE SURFACES
   TERMINALS ARE IDENTICAL
   INDEX RIBS ARE IDENTICAL

2. WHEN USING THIS INFORMATION FOR A NEW DESIGN, REQUEST THE LATEST COPY OF THIS PRINT FROM PACKARD ELECTRIC.

RECOMMENDED MATERIAL: GLASS REINFORCED NYLON OR POLYESTER.

## MATING CONNECTOR INFORMATION

| DRAWING HISTORY | | | | | | | | | | |
|---|---|---|---|---|---|---|---|---|---|---|
| DATE | ECN | REV | N/P | CHG | ZONE | REVISION HISTORY | AUTH | DR | APVD 1 | APVD 2 |
| 17JN05 | R | 01 | - | - | | CLEARED REVISION COLUMN, redrawn to PD AND UPDATED PDM ATTRIBUTES | 26W026 | ECB | AUB | DDO |
| 27JL05 | R | 02 | - | - | | 12146045- UPDATED MAT'L COLOR OF CONN | 27D649 | JTZ | PRG | ESI |
| 13OC11 | R | 03 | - | - | | ALL ACTIVE PARTS - UPDATED CONNECTOR AND ADDED APPLICATION DATA NOTE | 415658 | KBM | JAA | DEM |

DELPHI
DELPHI PACKARD ELECTRICAL/ELECTRONIC ARCHITECTURE WARREN, OH

| | | DATE |
|---|---|---|
| DR | DAVE SIEBLE | 02JL99 |
| APVD1 | R.H. PARKHURST | 24JL99 |
| APVD2 | R.H. PARKHURST | 04APR0 |
| APVD3 | R.E. DAUM | 04APR0 |
| APVD4 | | |
| APVD5 | | |

DWG TYPE: PART DRAWING
STYLE
VOLUME (CUM): SYSTEM CODE: D

UNLESS OTHERWISE SPECIFIED
THIS DOCUMENT IS IN ACCORDANCE WITH ASME Y14.5M-1994 AS INTERPRET BY THE M-BUSINESS DIMENSIONING AND TOLERANCING STANDARD. THIS DRAWING DEFINES THE FEATURES OF THE PART AS MEASURED BETWEEN DATUM REFERENCES.

ALL DIMENSIONS ARE IN MILLIMETERS

REFERENCE

THIRD ANGLE PROJECTION

DO NOT SCALE ONLY WITH DATA

SUBSTANCES OF CONCERN: NO RECYCLED CONTENT PER DELPHI (29492)

COLOR: SEE CHART

DRAWING NAME: TAXI ASM CONN F M/P 150 SLD

| DRAWING NUMBER | | | | | |
|---|---|---|---|---|---|
| 12092848 | | | | | |
| SIZE | SCALE | SHEET NO | SHEET NO | REV | N/P |
| A1x3 | 5:1 | 1 OF 2 | 1 OF 1 | R | 03 - |

| TOLERANCE UNLESS OTHERWISE SPECIFIED | | | | | | | | |
|---|---|---|---|---|---|---|---|---|
| DIMENSIONAL RANGE (MM) | 0 - 6 | 6 - 30 | 30 - 120 | 120 - 315 | 315 - 1000 | 1000 - 2000 | 2000 - 4000 | OVER 4000 |
| FINE | ±0.05 | ±0.10 | ±0.15 | ±0.20 | ±0.30 | ±0.50 | ±1.00 | |
| MEDIUM | ±0.10 | ±0.20 | ±0.30 | ±0.50 | ±0.80 | ±1.20 | ±2.00 | ±3.00 |
| COARSE | ±0.20 | ±0.50 | ±0.80 | ±1.20 | ±2.00 | ±3.00 | ±5.00 | ±8.00 |

GENERAL TOLERANCE (%)

PROCESS SENSITIVE DIMENSION
DIMENSIONS ENCLOSED IN ( ) INDICATE REFERENCE DIMENSIONS, NO NC TOLERANCE LIMITS ARE ESTABLISHED

| DRAWING NUMBER |
|---|
| 12092848 |

84850S1

# X-ON Electronics

Largest Supplier of Electrical and Electronic Components

***Click to view similar products for*** Automotive Connectors ***category:***

***Click to view products by*** APTIV ***manufacturer:***

Other Similar products are found below :

003-018-000 60993906-B M902-2161 M902-2344 72.330.1035.1 73.353.4028.0 F166900 F358300-B F407400 776880-1 827153-1 8N1515-32-24P 9-1326729-8 925474-1 928905-1 964562-4 968782-1 98891-1012 12004475-L 12041318-B 12052466 12064869 12015909 1-21030-1 12041318 12047946-B 12047957 12110546-B 12131792 12092346 HD34-18-14PT HD46-24-23SN-059 HDB36-24-16PN-059 12185550 12147304 13681974 13755420 13783086 13830674 13832576 13542772 1393425-2 13964573 13846842 13869383 13873308 13953995 1428188-1 1437287-3 1438231-5