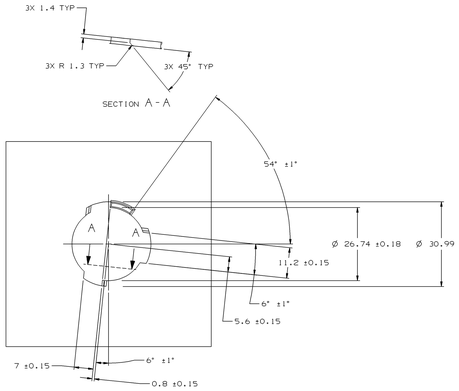

MOUNTING HOLE VIEW, SHOWING INSIDE OF LAMP HOUSING

SCALE 2:1

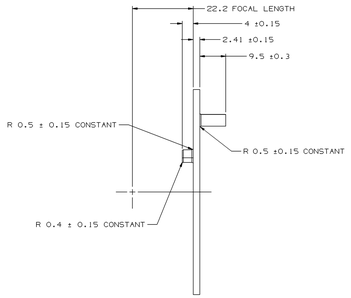

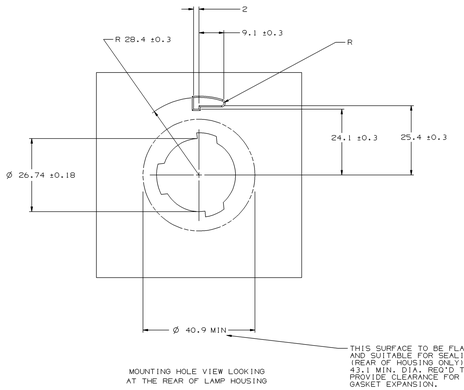

MOUNTING HOLE VIEW LOOKING AT THE REAR OF LAMP HOUSING

SCALE 2:1

SYMBOL DEFINITION		MISSING NUMBERS
A DIMENSION WITHOUT AN INSPECTION REPORT SYMBOL (▭) DOES NOT REQUIRE INSPECTION. IT MAY BE CONTROLLED ON AN INDIVIDUAL COMPONENT DRAWING.	TOTAL NO. OF SYMBOLS ON DRAWING: 6	
	LAST NO. USED: 6	

DWG STATUS DATE	STS	REV	N/P	CHG	ZONE	REVISION HISTORY	AUTH	DR	APVD 1	APVD 2
15AO00	R	01	-	-		CLEARED REV COL; ALL PARTS - REDRAWN	204168	AMR	AMR	MEF
25SE01	R	02	-	-		ALL PARTS - ADDED NOTE	213605	TSH	TSH	MEF
22JA03	R	03	-	-		ALL PARTS - ADDED R18, STOP & DIM AND REVISED MATERIAL SPECIFICATION	235506	RH	RH	AL
19AP04	R	04	-	-		ALL PARTS - UPDATED PDM ATTRIBUTES	253774	ADK	ADK	MEF
28NV04	R	05	-	-		ALL PARTS - ADDED MINOR DEFECT CALLOUT	255246	ADK	ADK	MEF
18AP05	R	06	-	-		ALL PARTS - ADDED DIM 26.74 ±0.18	267151	TAI	TAI	MEF
09AU05	R	07	-	-		12160394 - MAT'L SPEC WAS M3592002	270776	CCV	PRO	EST

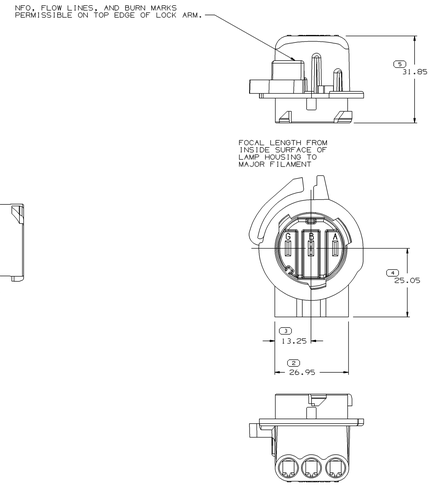

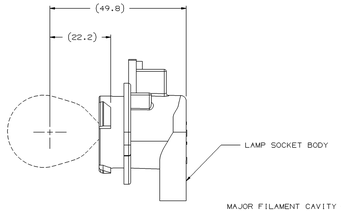

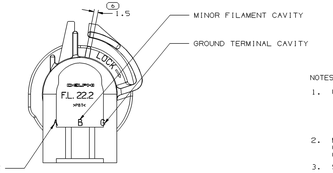

NOTES

1. UNLESS OTHERWISE SPECIFIED AND/OR INDICATED: DIMENSIONS ARE TO FACE OF VIEW SHOWN AND AUTOMATICALLY ROUNDED BY COMPUTER FOR INSPECTION (SEE MATH MODEL FOR PRECISE DIMENSIONS). FOR ALL OTHER DIMENSIONS NOT SHOWN BUT REQUIRED FOR TOOL BUILD, SEE MATH MODEL FOR PRECISE TOOL PATH DATA.
2. MATERIAL RECYCLING CODE PER ISO 11469. (1)X(0.1) RAISED CHARACTERS AS SHOWN TO BE LOCATED ON ANY EXTERIOR SURFACE. OPTIONAL CONSTRUCTION TO BE NO MATERIAL RECYCLING CODE.
3. SEALING CODE - SEALED
4. THIS PART ACCEPTS THE FOLLOWING COMPONENTS OR EQUIVALENT:
   CAVITIES TO ACCEPT 12066638 TERMINAL OR EQUIVALENT.
   CONNECTOR SEAL 12129909
   CABLE SEAL 12015323
   SEE DETAIL DRAWING FOR COMPATIBLE O.D. RANGE
5. (1)X(0.1) RAISED DELPHI CORPORATE BRAND TO BE LOCATED ON ANY EXTERIOR SURFACE, PREFERABLY VISIBLE AT FINAL ASSEMBLY. OPTIONAL CONSTRUCTION TO BE "PED" OR NO LOGO.
6. 9441B34 BULB SHOWN ONLY TO ILLUSTRATE INSTALLATION.
7. SOCKET LOCK ARM IS NOT REQUIRED TO ENGAGE HOUSING LOCK TOWER FOR SOCKET RETENTION WHEN USING SEAL 12129909 OR EQUIVALENT, BUT IS REQUIRED WHEN USING FOAM GASKET 12027120 OR EQUIVALENT.

15354864	02	AC		M4695001 PBT NAT	15354683	ORA
15324084	02	AC		M3592010 PA66 HS IM BRN	12177163	BEIGE
12160394	10	-		M3592024 PA66 HS IM CRM	12177163	BEIGE
PART NO	REV	N/P	STATUS	MATERIAL SPECIFICATION AND COLOR	PART NO	COLOR
					INSERT ASM	

DRAWING NUMBER: 15324090
SIZE A1x3 | SCALE 2:1 | FRAME NO 2 OF 2 | SHEET NO 1 OF 1 | STS R | REV 07 | N/P -

DIMENSIONAL RANGE (MM)									
FROM	0	>3	>6	>30	>10	>100	>200	>400	>800
TO	3	6	30	10	100	200	400	800	
TOLERANCE UNLESS OTHERWISE SPECIFIED									
±0.15	±0.2	±0.3	±0.5	±0.8	±1	±1.2	±1.6	±2	±2.5
ANGULAR TOLERANCE ±2°									

(2) PROCESS SENSITIVE DIMENSION

DIMENSIONS ENCLOSED IN ( ) INDICATE REFERENCE DIMENSIONS AND NO TOLERANCE LIMITS ARE ESTABLISHED.

REFERENCE

THIRD ANGLE PROJECTION

DO NOT SCALE

USE MATH DATA

DELPHI

DELPHI PACKARD ELECTRIC SYSTEMS
WARREN, OH

		DATE
DR		
APVD1	J. BANZO	30SE97
APVD2	J. BANZO	30SE97
APVD3	S.E. HEFFERNAN	02OC97
APVD4		
APVD5		

DWG TYPE: PART DRAWING
STYLE
VOLUME (CM³): 9.865
SYSTEM CODE

UNLESS OTHERWISE SPECIFIED
THIS DOCUMENT IS IN ACCORDANCE WITH ASME Y14.5M-1994 UNLESS OTHERWISE SPECIFIED. DIMENSIONS AND TOLERANCING ACCORDING TO ISO. ALL GEOMETRIC TOLERANCES AND RELATED DATUMS APPLY AFTER FINISHED FORM OF PART. DATUMS ARE ESTABLISHED FROM FEATURES THAT ARE ESTABLISHED BY INSPECTION OR LOCATION TOLERANCES. DATUM FEATURES ARE NOT ALWAYS ARE SHARED SEPARATELY, REGARDLESS OF DATUM REFERENCE.
ALL DIMENSIONS ARE IN MILLIMETERS.

SUBSTANCES OF CONCERN: PVC RECYCLED
MATERIAL: CONTENT PER DELPHI (DPAP00)
FINISH: SEE CHART

DRAWING NAME: TAXI CONN LP SOC WEDGE W3

DRAWING NUMBER: 15324090
SIZE A1x3 | SCALE 2:1 | FRAME NO 2 OF 2 | SHEET NO 1 OF 1 | STS R | REV 07 | N/P -

T 3 5 0 4 0 9 0

X-ON Electronics

Largest Supplier of Electrical and Electronic Components

Click to view similar products for Automotive Connectors ***category:***

Click to view products by APTIV ***manufacturer:***

Other Similar products are found below :

003-018-000 60403001 60993906-B 629515004020001 M902-2131 M902-2161 72.330.1035.1 73.353.4028.0 F119300-B F166900 F258300-B F358300-B F407400 F444110 F487000 F509500B-B 827153-1 8N1515-32-24P 9-1326729-8 925474-1 928905-1 964562-4 968782-1 GT17SA-8DS-HU 98891-1012 98947-1016 12004475-L 12010290 12010309-B 12015454 12020219-B 12020308 12041318-B 12052225-L 12052466 12059125 12064869 12004327-B 12010503-B 12015308 12015384 12015909 1-21030-1 12041254 12041318 12047946-B 12047957 12047957-L 12059473 12066261