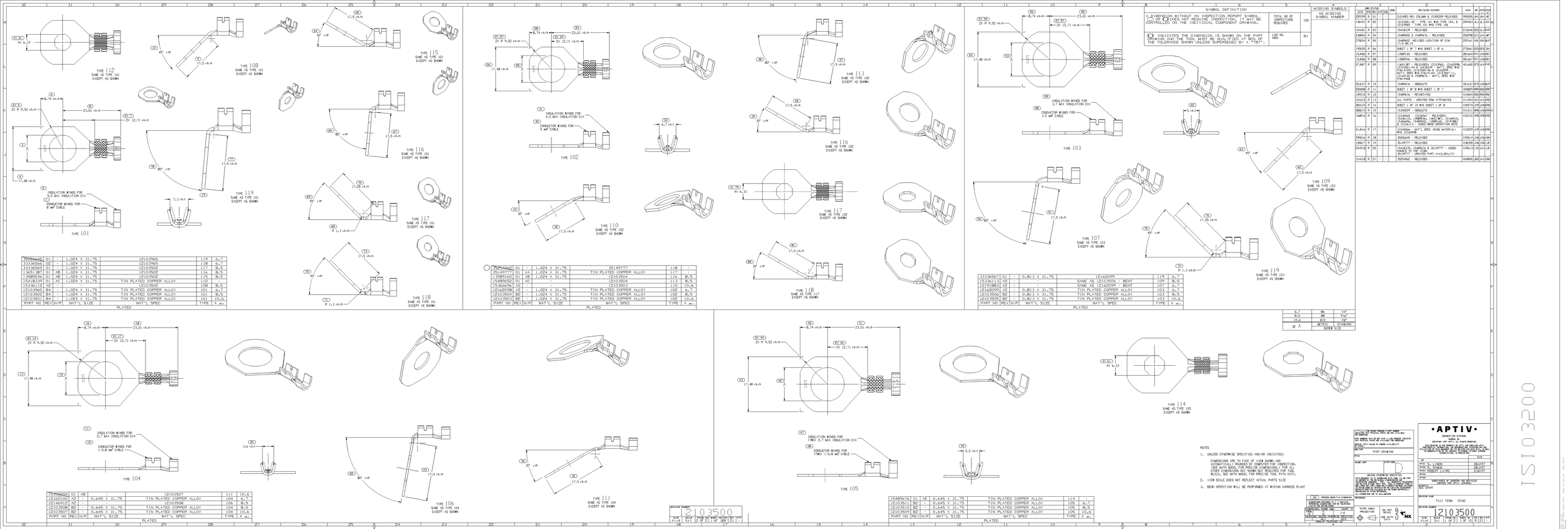

1759462	01	-	1.024 X 31.75	12103965	119	6.7
3333656	02	-	1.024 X 31.75	12103965	118	6.7
3333656	01	-	1.024 X 31.75	12103502	117	8.5
1365387	01	AB	1.024 X 31.75	12103502	116	8.5
1589246	01	AB	1.024 X 31.75	12103502	115	8.5
1541839	01	AE	1.024 X 31.75	TIN PLATED COPPER ALLOY	112	-
1536656	A2	-	-	12103502	108	8.5
1210965	B4	-	1.024 X 31.75	TIN PLATED COPPER ALLOY	101	6.7
1210502	B4	-	1.024 X 31.75	TIN PLATED COPPER ALLOY	101	8.5
1210501	B4	-	1.024 X 31.75	TIN PLATED COPPER ALLOY	101	10.6
PART NO	REV	N/P	MAT'L SIZE	MAT'L SPEC	TYPE	A ea.

PLATED

1759462	01	-	1.024 X 31.75	351497777	118	-
351497777	01	AA	1.024 X 31.75	TIN PLATED COPPER ALLOY	117	-
1589160	01	AB	1.024 X 31.75	12103504	116	8.5
1548965	01	AE	-	12103504	113	8.5
1536656	A2	-	-	12103503	110	10.6
1216208	A2	-	1.024 X 31.75	TIN PLATED COPPER ALLOY	102	6.7
1210504	B2	-	1.024 X 31.75	TIN PLATED COPPER ALLOY	102	8.5
1210503	B2	-	1.024 X 31.75	TIN PLATED COPPER ALLOY	102	10.6
PART NO	REV	N/P	MAT'L SIZE	MAT'L SPEC	TYPE	A ea.

PLATED

3333656	01	-	0.813 X 31.75	12162099	119	6.7
1523613	A2	-	-	SAME AS 12162506 - BENT	109	8.5
1215918	A2	-	-	SAME AS 12162099 - BENT	107	6.7
1216209	A2	-	0.813 X 31.75	TIN PLATED COPPER ALLOY	103	6.7
1216506	B2	-	0.813 X 31.75	TIN PLATED COPPER ALLOY	103	8.5
1210505	B2	-	0.813 X 31.75	TIN PLATED COPPER ALLOY	103	10.6
PART NO	REV	N/P	MAT'L SIZE	MAT'L SPEC	TYPE	A ea.

PLATED

6.7	M8
8.5	M8
10.6	M10
Ø A	METRIC (STANDARD) SCREW SIZE

1548966	01	AE	0.645 X 31.75	TIN PLATED COPPER ALLOY	114	-
1210511	B2	-	0.645 X 31.75	TIN PLATED COPPER ALLOY	105	6.7
1210510	B2	-	0.645 X 31.75	TIN PLATED COPPER ALLOY	105	8.5
1210509	B2	-	0.645 X 31.75	TIN PLATED COPPER ALLOY	105	10.6
PART NO	REV	N/P	MAT'L SIZE	MAT'L SPEC	TYPE	A ea.

PLATED

SYMBOL DEFINITION		MISSING SYMBOLS
A DIMENSION WITHOUT AN INSPECTION REPORT SYMBOL (□ OR ⬭) DOES NOT REQUIRE INSPECTION; IT MAY BE CONTROLLED ON THE INDIVIDUAL COMPONENT DRAWING.	TOTAL NO OF INSPECTIONS REQUIRED 100	NO MISSING SYMBOL NUMBER
⬭ INDICATES THE DIMENSION IS SHOWN ON THE PART DRAWING AND THE TOOL MUST BE MADE AT 80% OF THE TOLERANCE SHOWN UNLESS SUPERSEDED BY A "TBT".	LAST NO. USED 81	

ZONE	REVISION HISTORY					
ZONE	STS	REV	N/P	CAE	DATE	APPROVAL
22R3M	P	03	-	CLEARED REV COLUMN & 15R3D2R RELEASED	R06355	JLA JLA 14-04
14W3S	P	02	-	12102501-07 - TYPE 111 WAS TYPE 104, & 12102506 & TYPE 116 WAS TYPE 115	2594423	JLA JLA 11-04
18W3S	P	03	-	1541839 - RELEASED	2126445	EES JLA 29-07
10W3S	P	04	-	1548965Z & 1548967A - RELEASED	2522798	CCC JLA 14-07
27S2W	P	05	-	1548967C -REVISED LOCATION OF DIM 17.5 ±0.15	2591461	HJM JLA 16-07
19C0S	P	06	-	SHEET 1 OF 7 WAS SHEET 1 OF 6	2770661	EES EES 30-10
15J4W	P	07	-	1358916A5 - RELEASED	2816464	MTL JLA 8-01
15J4W	P	08	-	1358916A6 - RELEASED	2816467	MTL JLA 8-01
07J4U	P	09	-	1365387 - RELEASED; 1210965, 1210506, 1210501-04 & 1210810 - WAS, SPEC WAS P36144TN; 1210505-06 & 1210509 - WAS, SPEC WAS P36144TN; 1210502-03, 1210507-11, 1210510 & 1548966 - WAS, SPEC WAS P36144NB	4016630	STS JLA 14-07
20L8J	P	10	-	1548967A - OBSOLETE	4016630	STS JLA 14-07
29W0R	P	11	-	SHEET 1 OF 8 WAS SHEET 1 OF 7	4258279	MMM DGS 19-07
10F1E	P	12	-	1548967A - REINSTATED	4310104	MDC MDC 8-08
01U1D	P	13	-	ALL PARTS - UPDATED MPN ATTRIBUTES	4413797	JHM JLA 20-08
28W1S	P	14	-	SHEET 1 OF 10 WAS SHEET 1 OF 8	4430741	JHM JLA 8-09
08W2S	P	15	-	1520029 - OBSOLETE	4531811	MMM JLA 28-09
16W5A	P	16	-	3338565 - 3338567 - RELEASED; 1518121, 1589076A, 1365387, 1214903, 1536656, 1548965Z, 1589160, 1214918B2 & 1518811 - ADDED BEND OPERATION NOTE	4823122	MMM MMM 14-10
01J6W	P	17	-	3338566 - WAS, SPEC WAS MATERIAL: A36 12162098	4833291	JHM JLA 28-10
29R6U	P	18	-	3565645 - RELEASED	4835414	JHM JLA 4-11
09X0T	P	19	-	2514777 - RELEASED	4838155	JHM JHM 1-11
24P2R	P	20	-	1541812B, 1548967A & 2514777 - ADDED ANGLE TO TOP VIEW, 2514777 - UPDATED PART AVAILABILITY	4796133	LJG JLA 1-13
31A1G	P	21	-	1525462 - RELEASED	4408845	JJD JLA 1-14

SYMBOL	DEFINITION
⬭	PROCESS SENSITIVE DIMENSION
⬭	CRITICAL DIMENSION, SUPPLIER CONFIRMATION OF A TELEGRAPHIC SUMMARY IS REQUIRED
⬭	CRITICAL DIMENSION, SUPPLIER CONFIRMATION OF A DETAILED INSPECTION RECORD IS REQUIRED

UNLESS OTHERWISE SPECIFIED

NOTES

1. UNLESS OTHERWISE SPECIFIED AND/OR INDICATED:

   DIMENSIONS ARE TO FACE OF VIEW SHOWN WHEN PLACED ON A FLAT SURFACE FOR INSPECTION. USE WITH MODEL FOR PRECISE DIMENSIONALLY FOR ALL OTHER DIMENSIONS NOT SHOWN BUT REQUIRED FOR TOOL BUILD, SEE WITH MODEL FOR PRECISE TOOL PATH DATA.

2. VIEW SCALE DOES NOT REFLECT ACTUAL PARTS SIZE

3. BEND OPERATION WILL BE PERFORMED AT WIRING HARNESS PLANT

THIS DRAWING IS THE PROPERTY OF APTIV AND CONTAINS APTIV PROPRIETARY INFORMATION. IT MAY NOT BE REPRODUCED OR DISCLOSED, IN WHOLE OR IN PART, WITHOUT THE WRITTEN PERMISSION OF APTIV.
COPYRIGHT (YR) APTIV. ALL RIGHTS RESERVED.

PART NUMBERS THAT DO NOT HAVE A LIVE PRODUCT INDICATE THAT MODELS, PLANS AND DATA ARE NOT AVAILABLE FOR ORDERING.

DRAWINGS WITH SHEETS TO ARCHIVE AVAILABILITY.

DRAWING TYPE: PART DRAWING

STYLE

ENGINE CONT | SYSTEM CODE

UNLESS OTHERWISE SPECIFIED

THIS DRAWING IS TO DESIGNATED WITH ONE (1) ON THE DRAWING TITLE BLOCK. THE DRAWING MUST BE PRODUCED WITHIN THE SPECIFIED DATE. ALL DIMENSIONS ARE TO BE MEASURED AT 20°C (68°F) UNLESS OTHERWISE SPECIFIED. ALL SURFACE FINISHES TO BE PER SPECIFICATION. ALL SURFACE TREATMENTS, PLATING OR COATING TO BE PER SPECIFICATION. ALL DIMENSIONS AND TOLERANCES TO BE PER ASME Y14.5M-1994.

DIMENSIONS ARE IN MILLIMETERS

REFERENCE

SIZE: SHEET

		DATE
APPROVAL		
APPROV	G. LIMON	08-JAN-07
APPROV	M. RIVERA	08-JAN-07
APPROV	ROBERT LATZO	23-JAN-07
APPROVAL		
APPROVAL		

SUBSTANCES OF CONCERN AND RECYCLED CONTENT PER APTIV STANDARD

SIZE: SHEET

TITLE: TAXI TRIM RING

DRAWING NUMBER: 12103500 REV: A

THIRD ANGLE PROJECTION

DO NOT SCALE

SHEET 1 OF 2

DRAWING NUMBER	REV	SCALE	SHEET	OF	SHEET	OF	REV	N/P
12103500	A	1:1	1	OF 2	1	OF 10	R2	-

•APTIV•
CONNECTION SYSTEMS
CONFIDENTIAL
COPYRIGHT (YR) APTIV. ALL RIGHTS RESERVED.
THIS DRAWING IS THE PROPERTY OF APTIV AND CONTAINS APTIV PROPRIETARY INFORMATION. IT MAY NOT BE REPRODUCED OR DISCLOSED, IN WHOLE OR IN PART, WITHOUT THE WRITTEN PERMISSION OF APTIV. ALL RIGHTS RESERVED. THIS DOCUMENT IS CONFIDENTIAL.

		DATE
APPROVAL		
APPROV	G. LIMON	08-JAN-07
APPROV	M. RIVERA	08-JAN-07
APPROV	ROBERT LATZO	23-JAN-07
APPROVAL		
APPROVAL		

SUBSTANCES OF CONCERN AND RECYCLED CONTENT PER APTIV STANDARD

SIZE: SHEET

TITLE: TAXI TRIM RING

DRAWING NUMBER: 12103500 REV: A

DRAWING NUMBER	REV	SCALE	SHEET	OF	SHEET	OF	REV	N/P
12103500	A	1:1	1	OF 2	1	OF 10	R2	-

ISO 3200

X-ON Electronics

Largest Supplier of Electrical and Electronic Components

Click to view similar products for Automotive Connectors ***category:***

Click to view products by APTIV ***manufacturer:***

Other Similar products are found below :

003-018-000 60403001 60993906-B 629515004020001 M902-2131 M902-2161 72.330.1035.1 73.353.4028.0 F119300-B F166900 F258300-B F358300-B F407400 F444110 F487000 F509500B-B 827153-1 8N1515-32-24P 9-1326729-8 925474-1 928905-1 964562-4 968782-1 GT17SA-8DS-HU 98891-1012 98947-1016 12004475-L 12010290 12010309-B 12015454 12020219-B 12020308 12041318-B 12052225-L 12052466 12059125 12064869 12004327-B 12010503-B 12015308 12015384 12015909 1-21030-1 12041254 12041318 12047946-B 12047957 12047957-L 12059473 12066261