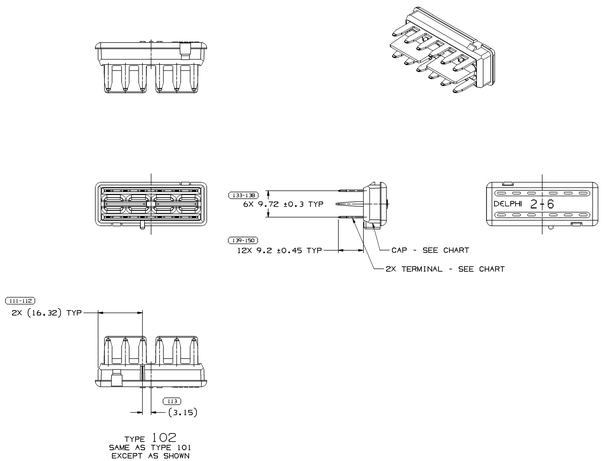

TYPE 102
SAME AS TYPE 101
EXCEPT AS SHOWN

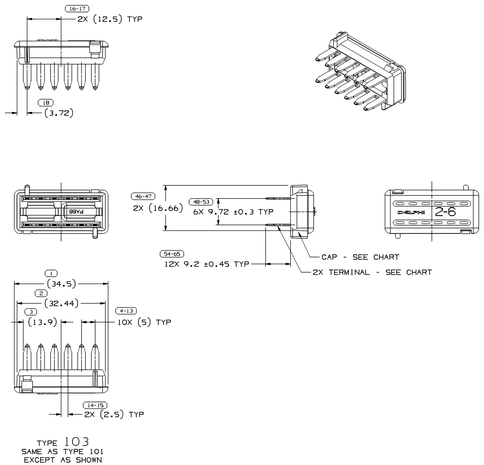

TYPE 103
SAME AS TYPE 101
EXCEPT AS SHOWN

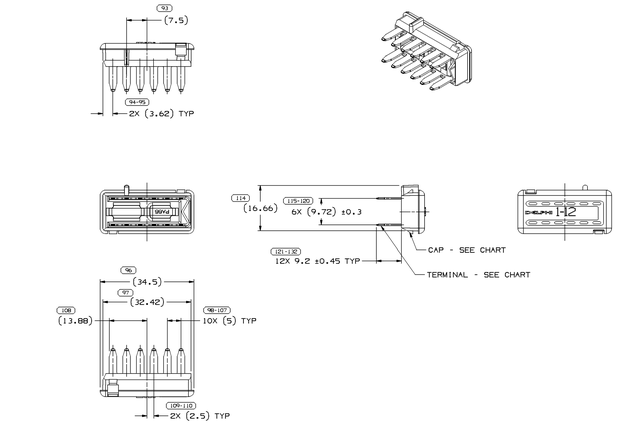

TYPE 104
SAME AS TYPE 101
EXCEPT AS SHOWN

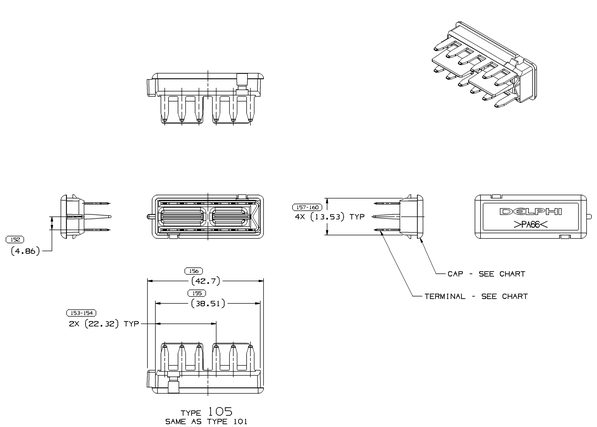

TYPE 105
SAME AS TYPE 101
EXCEPT AS SHOWN

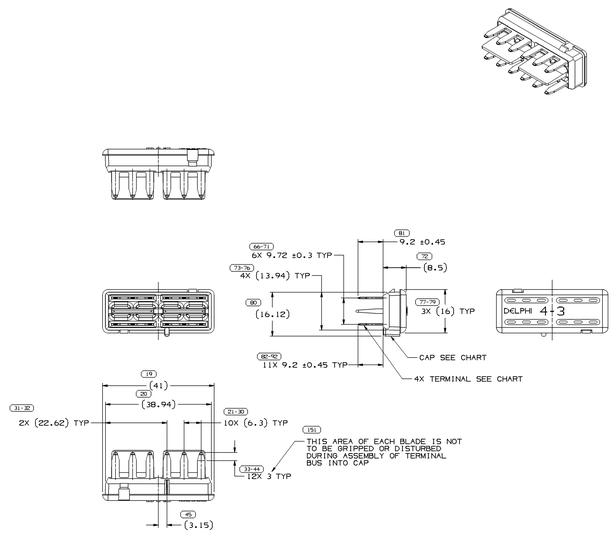

TYPE 101

NOTES

1. UNLESS OTHERWISE SPECIFIED AND/OR INDICATED:
   DIMENSIONS ARE TO FACE OF VIEW SHOWN AND AUTOMATICALLY ROUNDED BY COMPUTER FOR INSPECTION. (SEE MATH MODEL FOR PRECISE DIMENSIONS.) FOR ALL OTHER DIMENSIONS NOT SHOWN BUT REQUIRED FOR TOOL BUILD, SEE MATH MODEL FOR PRECISE TOOL PATH DATA.

15363B9	01	AA	INACTIVE	105	M35920 24 PA66 HS IM-CRM	15363B6	15363B8	15363B5
15305292	A5	-		104	M35920 24 PA66 HS IM-CRM	12191205	15305293	15305291
15305289	A4	-		103	M35920 15 PA66 HS IM-GRN LT	12176666	15305290	15305288
12191208	C2	-	OBSOLETE	104	R0071714 PA66 HS IM-CRM	12191205	12191206	12191207
12176665	D2	-	OBSOLETE	103	R0071787 PA66 HS IM-GRN LT	12176666	12176664	12176663
12176479	C3	-		102	M35920 01 PA66 HS IM-BLK	12176480	12176477	12176474
12176478	C4	-		101	M35920 10 PA66 HS IM-BRN	12176481	12176476	12176473
PART NO	REV	N/P	STATUS	TYPE	MATERIAL SPECIFICATION AND COLOR	TERMINAL NO	CAP NO	MATING CONNECTOR

SYMBOL DEFINITION		MISSING NUMBERS
A DIMENSION WITHOUT AN INSPECTION REPORT SYMBOL [ ] DOES NOT REQUIRE INSPECTION. IT MAY BE CONTROLLED ON AN INDIVIDUAL COMPONENT DRAWING.	TOTAL NO. OF SYMBOLS ON DRAWING: 43	
	LAST NO. USED: 160	

DWG STATUS DATE	STS	REV	N/P	CHG	ZONE	REVISION HISTORY	AUTH	DR	KP/QVP 1	KP/QVP 2
02MR99	R	001	-	-		CLEANED REVISION COLUMN; 12176478 - WRIT. SPEC WAS R0071754 - CHANGE LEVEL ADVANCED	192369	PDM	001	GD
09AU05	R	02	-	-		ALL ACTIVE PARTS - REVISED MATERIAL SPEC TO LATEST M-SPEC	270592	RH	RH	WTM
26AU05	R	03	-	-		12176478, 15305289 & 15305292 - UPDATED PDM ATTRIBUTES	271679	TA1	TA1	RL
01SE05	R	04	-	-		15363B9 - RELEASED	270771	RH	RH	GR
03MR06	R	05	-	-		15363B9 - INACTIVE	278026	ACG	JVW	DEP

DWG TYPE	PART DRAWING
STYLE	
VOLUME (CM³)	SIZE D

UNLESS OTHERWISE SPECIFIED
THIS DRAWING IS IN ACCORDANCE WITH ASME Y14.100-1998 OR IMPERIAL ISO 10 GLOBAL DIMENSIONING AND TOLERANCING STANDARD. THE ISO 10 STANDARD PROVIDES AN ALTERNATIVE TO ASME Y14.5M-1994 FEATURES ARE NOT BOUND SEPARATELY. REFERENCE SP-5700 REFERENCE.

ALL DIMENSIONS ARE IN MILLIMETERS

REFERENCE

THIRD ANGLE PROJECTION

DO NOT SCALE

USE MATH DATA

DELPHI
DELPHI PACKARD ELECTRIC SYSTEMS
WARREN, OH

		DATE
DR		
KP/01	DAVE STEELE	05MY95
KP/02	DAVE STEELE	05MY95
KP/03	G. DETTER	12MY95
KP/04		
KP/05		

SUBSTANCES OF CONCERN: NO RECYCLED CONTENT PER DELPHI (2MN90)

DESIGN OF:
SEE CHART

DRAWING NAME
TAXI ASM COV CONN M/P

DRAWING NUMBER
12176523

SIZE	SCALE	FRAME NO	SHEET NO	TOTAL	REV	N/P
A1x3	2:1	1 OF 2	1 OF 1	R	05	-

(81) PROCESS SENSITIVE DIMENSION
DIMENSIONS ENCLOSED IN ( ) INDICATE REFERENCE DIMENSIONS, NO GD TOLERANCE LIMITS ARE ESTABLISHED

DECIMAL PLACES (MM)	0	1	2	3	4	DEGREE BY				
TOL	± 1	± .5	± .25	± .05	± .025	± 30	± 20	± 10	± 5	± 2.5
						± 100	± 50	± 25	± 10	± 5

TOLERANCE UNLESS OTHERWISE SPECIFIED
[±0.15] [±0.1] [±0.5] [±0.4] [±0.3] [±0.2] [±1] [±1.2]
MODE OF TOLERANCE: DC

THIS DRAWING IS THE PROPERTY OF DELPHI PACKARD ELECTRIC SYSTEMS. THIS DRAWING MAY NOT BE REPRODUCED OR DISTRIBUTED WITHOUT WRITTEN PERMISSION.

DELPHI PACKARD ELECTRIC SYSTEMS
DRAWN BY: PDM-AUTO
DATE: 27-11-13
DRAWING NUMBER: 12176523
SHEET 1 OF 1

X-ON Electronics

Largest Supplier of Electrical and Electronic Components

Click to view similar products for Automotive Connectors ***category:***

Click to view products by APTIV ***manufacturer:***

Other Similar products are found below :

003-018-000 60403001 60993906-B 629515004020001 M902-2131 M902-2161 72.330.1035.1 73.353.4028.0 F119300-B F166900 F258300-B F358300-B F407400 F444110 F487000 F509500B-B 827153-1 8N1515-32-24P 9-1326729-8 925474-1 928905-1 964562-4 968782-1 GT17SA-8DS-HU 98891-1012 98947-1016 12004475-L 12010290 12010309-B 12015454 12020219-B 12020308 12041318-B 12052225-L 12052466 12059125 12064869 12004327-B 12010503-B 12015308 12015384 12015909 1-21030-1 12041254 12041318 12047946-B 12047957 12047957-L 12059473 12066261