SYMBOL DEFINITION		MISSING SYMBOLS
A DIMENSION WITHOUT AN INSPECTION REPORT SYMBOL (*) DOES NOT REQUIRE INSPECTION. IT MAY BE CONTROLLED ON THE INDIVIDUAL COMPONENT DRAWING.	TOTAL NO OF INSPECTIONS REQUIRED: 15	B
	LAST NO. USED: 14	

REVISION HISTORY											
DWG STATUS							DATE	DR	PROOF	PROOF
DATE	STATUS	REV	PLOT	CAD	ZONE					
09NOV18	R	01	-	-		PART DRAWING CREATED	41294??	DA	DM	TM
12DEC18	R	02	-	-		UPDATED COMPONENTS ITEM 1 WAS 13B25210 ITEM 2 WAS 13B32501 AND ITEM 3 WAS 13B32509.ADDED NOTES 7, 8 AND 9.ADDED TERM VIEW AND CABLE STRIP BLOCK	41475??	BOD	BOD	TM
17JAN19	R	02	A1	-		ADDED LEVER LOCK SHIPPING POSITION VIEW. ZX 7.99 WAS 2.05 AND REMOVED 2XN	41883#	CDR	JAA	TM
18DEC19	R	03	-	-		UPDATED GRAPHICS	41947?	BK	DM	TM

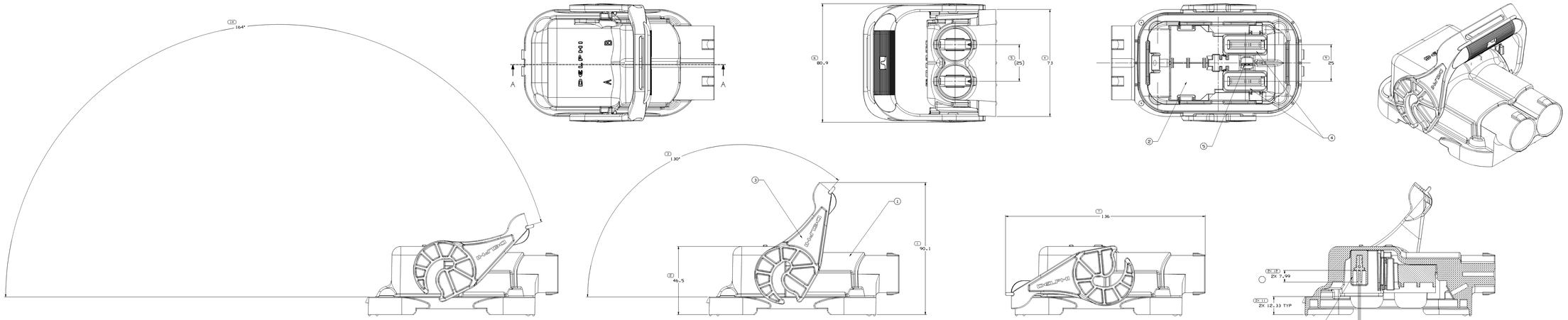

○ LEVER LOCK SHIPPING POSITION

LEVER LOCK PRE-STAGE POSITION

LEVER LOCK MATED POSITION

TERMINAL ASM AND CABLE STRIP

2X NEEDED FOR CONN ASM

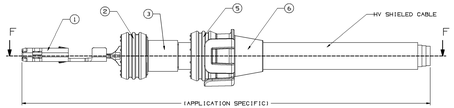

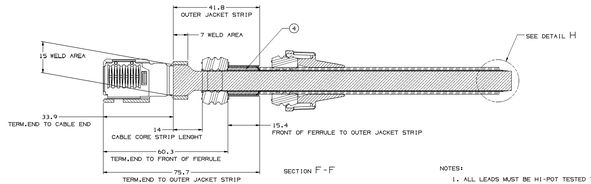

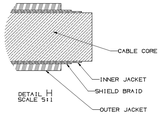

ADDITIONAL ASSEMBLY INFORMATION

THE ASSEMBLIES SHOWN ON THIS DRAWING REQUIRE THE USE OF 35MM² HV SHIELDED CABLE PER M6040. FERRULES MUST BE LOCATED AS SHOWN WHEN CRIMPED WITH RESPECT TO THE TERMINAL & MEET PULL REQUIREMENTS OF USCAR37.

CABLE MUST BE INSERTED THROUGH THE SEAL RETAINER(6) AND SHIELD SEAL(5) BEFORE APPLICATION OF INNER(4) AND OUTER FERRULE(3). PRIMARY SECONDARY SEAL(2) BEFORE APPLICATION OF TERMINAL ASM(1). CABLE MUST BE PARTIAL STRIPPED AND NO CONDUCTOR STRANDS OR SHIELD BRAID ARE TO BE EXPOSED WHEN APPLYING THE CABLE RETAINER(6) AND SHIELD SEAL(5).

ITEM	PART NO	QTY	DESCRIPTION
6	13B32582 (TAX1)	1	SEAL RETAINER
5	13B32579 (TAX1)	1	CABLE SEAL SHIELD
4	13B32560	1	INNER FERRULE
3	13B32561	1	OUTER FERRULE
2	13B32579 (TAX1)	1	CABLE SEAL PRIMARY
1	17B49?? (TAX1)	1	ASM F TERM RIGHT ANGLE

NOTES:

1. ALL LEADS MUST BE HI-POT TESTED TO 3000 VOLTS (AC) FOR 10 SECONDS.
2. CABLE ASSEMBLY MUST BE VALIDATED TO CUSTOMER REQUIREMENTS FOR APPLICATION.

35MM² HV SHILDED CABLE PER M6040

ITEM	PART NO	QTY	DESCRIPTION
5	13745246	1	TERMINAL SHUNT
4	13B32558	2	TERMINAL LOCK
3	12912151	1	LEVER LOCK
2	13B32592	1	INNER CONNECTOR
1	12912405	1	OUTER CONNECTOR

NOTES

1. UNLESS OTHERWISE SPECIFIED AND/OR INDICATED:
   DIMENSIONS ARE TO FACE OF VIEW SHOWN AND ARE TO BE MEASURED FOR INSPECTION USING THE 13B32576 MATH MODEL FOR PRECISE DIMENSIONS. FOR ALL OTHER DIMENSIONS NOT SHOWN BUT REQUIRED FOR TOOL BUILD, SEE MATH MODEL FOR PRECISE TOOL PATH DATA.
2. THIS PART CAN ONLY BE USED AS PART OF A HIGH VOLTAGE (HV) WIRING ASSEMBLY.
3. REFERENCE MATING COMPONENTS OR EQUIVALENT:
   HEADER ASSEMBLY TAX1 - 13B32583
4. THIS PART ACCEPTS THE FOLLOWING COMPONENTS OR EQUIVALENT:
   TERMINAL ASM - 13B15981
5. IF LEVER BECOMES DISLODGED FROM PRE-STAGE POSITION; RELOCATE TO PRE-STAGE POSITION BEFORE ASSEMBLY.
6. TERMINAL-CONNECTOR EXTRACTION: PRIMARY LOCK ONLY: IS GREATER THAN 250N.
7. TERMINAL LOCK DISENGAGE FORCE IS GREATER THAN 21N.
8. LEAK DECAY TEST MUST BE PERFORMED AT FINAL WIRE ASSEMBLY.
9. FOR APPLICATION DATA SEE THE APPLICATION DRAWING.

THIS DRAWING CONTAINS PROPRIETARY INFORMATION OF DELPHI. DISTRIBUTION, REPRODUCTION OR USE OF THIS DRAWING WITHOUT WRITTEN AUTHORIZATION IS PROHIBITED.

DRAWN BY	PHIT DRAWING
SIZE	
SCALE (SIZ)	SCALE (SIZ)
UNLESS OTHERWISE SPECIFIED: THIS DRAWING IS A DELPHIWORK RULE CODE 1A-1PN. DIMENSIONS ARE IN MILLIMETERS. DIMENSIONS ARE TO BE MEASURED AFTER PLATING. DIMENSIONS ARE AFTER PLATING. DIMENSIONS ARE AFTER PLATING OF PLATING REQUIRED.	
ALL DIMENSIONS ARE IN MILLIMETERS	
REFERENCE	PE196063
ESD (SA) PROCESS SENSITIVE DIMENSION	
DIMENSION MARKED WITH A (*) IS TO BE INSPECTED FOLLOWING THE 13B32576 MATHEMATICAL MODEL.	
DIMENSIONAL TOLERANCES UNLESS OTHERWISE SPECIFIED:	
ANGULAR: ±0.5° DECIMAL: .X ±0.1 .XX ±0.05 .XXX ±0.025	
THIRD ANGLE PROJECTION	
DO NOT SCALE DRAWING	
MATERIAL	
FINISH	
DELPHI	
DELPHI PHOENIX ELECTRICAL/ELECTRONIC ARCHITECTURE

X-ON Electronics

Largest Supplier of Electrical and Electronic Components

Click to view similar products for Automotive Connectors ***category:***

Click to view products by APTIV ***manufacturer:***

Other Similar products are found below :

003-018-000 60403001 60993906-B 629515004020001 M902-2131 M902-2161 72.330.1035.1 73.353.4028.0 F119300-B F166900 F258300-B F358300-B F407400 F444110 F487000 F509500B-B 827153-1 8N1515-32-24P 9-1326729-8 925474-1 928905-1 964562-4 968782-1 GT17SA-8DS-HU 98891-1012 98947-1016 12004475-L 12010290 12010309-B 12015454 12020219-B 12020308 12041318-B 12052225-L 12052466 12059125 12064869 12004327-B 12010503-B 12015308 12015384 12015909 1-21030-1 12041254 12041318 12047946-B 12047957 12047957-L 12059473 12066261