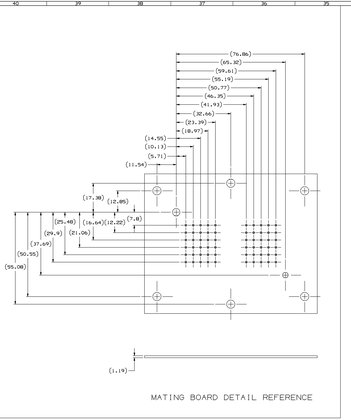

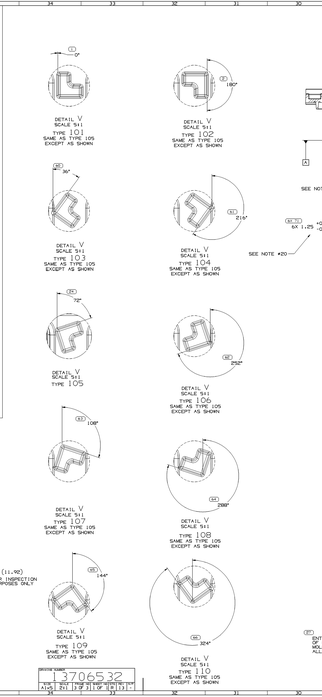

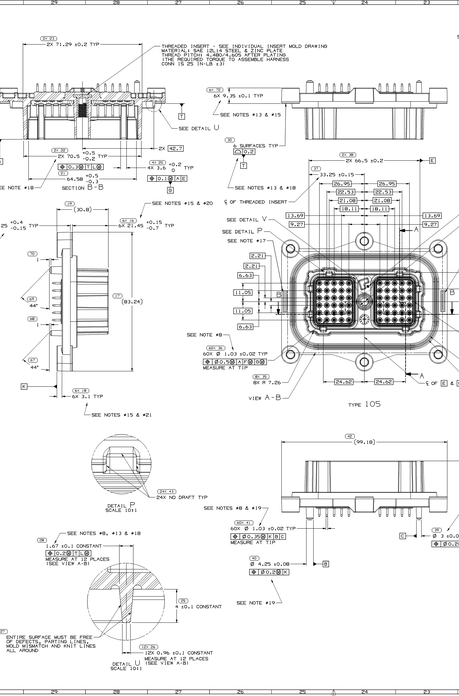

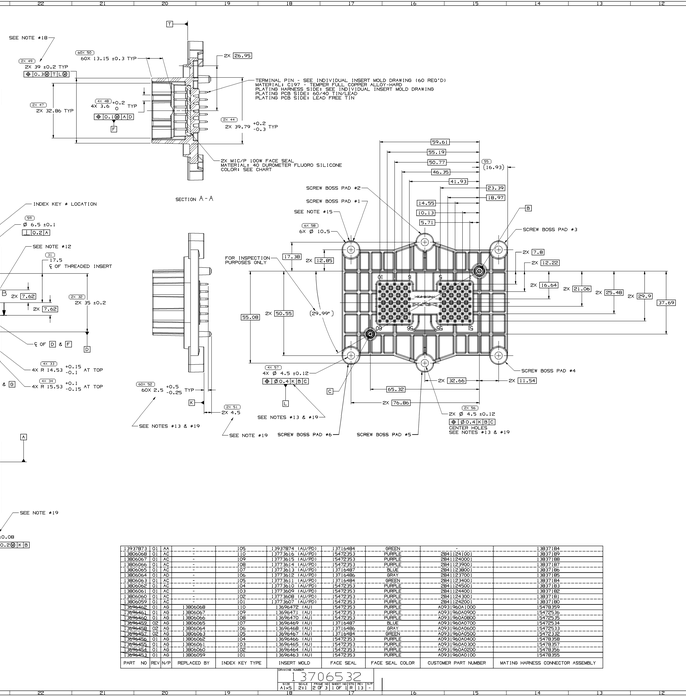

PART NO	NO	REV	N/P	REPLACED BY	INDEX KEY TYPE	FACE SEAL	FACE SEAL COLOR	CUSTOMER PART NUMBER	MATING HARNESS CONNECTOR ASSEMBLY
2931873	01	AA	-	-	05	2931874 (AU/R)	2J1J484	GREEN	8837(B)
3850508	01	AA	-	-	05	1371 BLU (AU/R)	5A1F0.5	PURPLE	2841(2A100)
3850509	01	AA	-	-	06	1371 BLU (AU/R)	5A1F0.5	PURPLE	2841(3A000)
3850510	01	AA	-	-	07	1371 BLU (AU/R)	5A1F0.5	PURPLE	2841(4A000)
3850511	01	AA	-	-	08	1371 BLU (AU/R)	5A1F0.5	PURPLE	2841(5A000)
3850524	01	AC	-	-	09	1371 BLU (AU/R)	2J1J484	GRAY	2841(2F000)
3850525	01	AC	-	-	10	1371 BLU (AU/R)	2J1J484	GREEN	2841(2F100)
3850526	01	AC	-	-	11	1371 BLU (AU/R)	5A1F0.5	PURPLE	2841(2F500)
3850527	01	AC	-	-	12	1371 BLU (AU/R)	5A1F0.5	PURPLE	2841(2F600)
3850528	01	AC	-	-	13	1371 BLU (AU/R)	5A1F0.5	PURPLE	2841(2F700)
3850529	01	AC	-	-	14	1371 BLU (AU/R)	5A1F0.5	PURPLE	2841(2F800)
3850530	01	AC	-	-	15	1371 BLU (AU/R)	5A1F0.5	PURPLE	2841(2F900)
3850531	01	AC	-	-	16	1371 BLU (AU/R)	5A1F0.5	PURPLE	2841(2F000)
3850532	01	AC	-	-	17	1371 BLU (AU/R)	5A1F0.5	PURPLE	2841(2F100)
3850533	01	AC	-	-	18	1371 BLU (AU/R)	5A1F0.5	PURPLE	2841(2F500)
3850534	01	AC	-	-	19	1371 BLU (AU/R)	5A1F0.5	PURPLE	2841(2F600)
3850535	01	AC	-	-	20	1371 BLU (AU/R)	5A1F0.5	PURPLE	2841(2F700)
3850536	01	AC	-	-	21	1371 BLU (AU/R)	5A1F0.5	PURPLE	2841(2F800)
3850537	01	AC	-	-	22	1371 BLU (AU/R)	5A1F0.5	PURPLE	2841(2F900)
3850538	01	AC	-	-	23	1371 BLU (AU/R)	5A1F0.5	PURPLE	2841(2F000)
3850539	01	AC	-	-	24	1371 BLU (AU/R)	5A1F0.5	PURPLE	2841(2F100)
3850540	01	AC	-	-	25	1371 BLU (AU/R)	5A1F0.5	PURPLE	2841(2F500)
3850541	01	AC	-	-	26	1371 BLU (AU/R)	5A1F0.5	PURPLE	2841(2F600)
3850542	01	AC	-	-	27	1371 BLU (AU/R)	5A1F0.5	PURPLE	2841(2F700)
3850543	01	AC	-	-	28	1371 BLU (AU/R)	5A1F0.5	PURPLE	2841(2F800)
3850544	01	AC	-	-	29	1371 BLU (AU/R)	5A1F0.5	PURPLE	2841(2F900)
3850545	01	AC	-	-	30	1371 BLU (AU/R)	5A1F0.5	PURPLE	2841(2F000)
3850546	01	AC	-	-	31	1371 BLU (AU/R)	5A1F0.5	PURPLE	2841(2F100)
3850547	01	AC	-	-	32	1371 BLU (AU/R)	5A1F0.5	PURPLE	2841(2F500)
3850548	01	AC	-	-	33	1371 BLU (AU/R)	5A1F0.5	PURPLE	2841(2F600)
3850549	01	AC	-	-	34	1371 BLU (AU/R)	5A1F0.5	PURPLE	2841(2F700)
3850550	01	AC	-	-	35	1371 BLU (AU/R)	5A1F0.5	PURPLE	2841(2F800)
3850551	01	AC	-	-	36	1371 BLU (AU/R)	5A1F0.5	PURPLE	2841(2F900)
3850552	01	AC	-	-	37	1371 BLU (AU/R)	5A1F0.5	PURPLE	2841(2F000)
3850553	01	AC	-	-	38	1371 BLU (AU/R)	5A1F0.5	PURPLE	2841(2F100)
3850554	01	AC	-	-	39	1371 BLU (AU/R)	5A1F0.5	PURPLE	2841(2F500)
3850555	01	AC	-	-	40	1371 BLU (AU/R)	5A1F0.5	PURPLE	2841(2F600)
3850556	01	AC	-	-	41	1371 BLU (AU/R)	5A1F0.5	PURPLE	2841(2F700)
3850557	01	AC	-	-	42	1371 BLU (AU/R)	5A1F0.5	PURPLE	2841(2F800)
3850558	01	AC	-	-	43	1371 BLU (AU/R)	5A1F0.5	PURPLE	2841(2F900)
3850559	01	AC	-	-	44	1371 BLU (AU/R)	5A1F0.5	PURPLE	2841(2F000)
3850560	01	AC	-	-	45	1371 BLU (AU/R)	5A1F0.5	PURPLE	2841(2F100)
3850561	01	AC	-	-	46	1371 BLU (AU/R)	5A1F0.5	PURPLE	2841(2F500)
3850562	01	AC	-	-	47	1371 BLU (AU/R)	5A1F0.5	PURPLE	2841(2F600)
3850563	01	AC	-	-	48	1371 BLU (AU/R)	5A1F0.5	PURPLE	2841(2F700)
3850564	01	AC	-	-	49	1371 BLU (AU/R)	5A1F0.5	PURPLE	2841(2F800)
3850565	01	AC	-	-	50	1371 BLU (AU/R)	5A1F0.5	PURPLE	2841(2F900)
3850566	01	AC	-	-	51	1371 BLU (AU/R)	5A1F0.5	PURPLE	2841(2F000)
3850567	01	AC	-	-	52	1371 BLU (AU/R)	5A1F0.5	PURPLE	2841(2F100)
3850568	01	AC	-	-	53	1371 BLU (AU/R)	5A1F0.5	PURPLE	2841(2F500)
3850569	01	AC	-	-	54	1371 BLU (AU/R)	5A1F0.5	PURPLE	2841(2F600)
3850570	01	AC	-	-	55	1371 BLU (AU/R)	5A1F0.5	PURPLE	2841(2F700)
3850571	01	AC	-	-	56	1371 BLU (AU/R)	5A1F0.5	PURPLE	2841(2F800)
3850572	01	AC	-	-	57	1371 BLU (AU/R)	5A1F0.5	PURPLE	2841(2F900)
3850573	01	AC	-	-	58	1371 BLU (AU/R)	5A1F0.5	PURPLE	2841(2F000)
3850574	01	AC	-	-	59	1371 BLU (AU/R)	5A1F0.5	PURPLE	2841(2F100)
3850575	01	AC	-	-	60	1371 BLU (AU/R)	5A1F0.5	PURPLE	2841(2F500)
3850576	01	AC	-	-	61	1371 BLU (AU/R)	5A1F0.5	PURPLE	2841(2F600)
3850577	01	AC	-	-	62	1371 BLU (AU/R)	5A1F0.5	PURPLE	2841(2F700)
3850578	01	AC	-	-	63	1371 BLU (AU/R)	5A1F0.5	PURPLE	2841(2F800)
3850579	01	AC	-	-	64	1371 BLU (AU/R)	5A1F0.5	PURPLE	2841(2F900)
3850580	01	AC	-	-	65	1371 BLU (AU/R)	5A1F0.5	PURPLE	2841(2F000)
3850581	01	AC	-	-	66	1371 BLU (AU/R)	5A1F0.5	PURPLE	2841(2F100)
3850582	01	AC	-	-	67	1371 BLU (AU/R)	5A1F0.5	PURPLE	2841(2F500)
3850583	01	AC	-	-	68	1371 BLU (AU/R)	5A1F0.5	PURPLE	2841(2F600)
3850584	01	AC	-	-	69	1371 BLU (AU/R)	5A1F0.5	PURPLE	2841(2F700)
3850585	01	AC	-	-	70	1371 BLU (AU/R)	5A1F0.5	PURPLE	2841(2F800)
3850586	01	AC	-	-	71	1371 BLU (AU/R)	5A1F0.5	PURPLE	2841(2F900)
3850587	01	AC	-	-	72	1371 BLU (AU/R)	5A1F0.5	PURPLE	2841(2F000)

SYMBOL DEFINITION		MISSING SYMBOLS	
A DIMENSION WITHOUT AN INSPECTION REPORT SYMBOL IS NOT REQUIRE INSPECTION. IT MAY BE CONTROLLED ON THE INDIVIDUAL COMPONENT DRAWING.	TOTAL NO. OF INSPECTIONS REQUIRED	392	15 29 45-46 53-54
	NEXT NO. USED	72	

ZONE	REVISION HISTORY	ECN
	ALL PARTS - RELEASED	4042E
	(MARKET)-99 - FACE SEAL #45 (WHITE) CHANGED TO #46	4049E
	ALL PARTS - ADED SCREW BOSS PAD #1 (SEAL FOR 2 PLCS), SCREW BOSS PAD #2 (SEAL FOR 2 PLCS), SCREW BOSS PAD #3 (SEAL FOR 1 PLC), SCREW BOSS PAD #4 (SEAL FOR 1 PLC), ADDED NOTES #8 & #13 & ADDED SHEET 2	4060E
	ALL PARTS - FOR #13 ADD SEAL FOR 2ND ROW OF CONN - SEE SHEET 2 FOR DETAILS & NOTE #13	4067E
	ALL PARTS - ADDED NOTE #22	4071E
	ALL PARTS - ADDED SCREW BOSS PAD #5 (SEAL FOR 1 PLC), SCREW BOSS PAD #6 (SEAL FOR 1 PLC), CHANGED SCREW BOSS PAD #4 TO SEALING PADDLE NOTE & SHEET 1 TO SEAL	4076E
	(MARKET)-99 - RELEASED ALL PARTS - CHANGED NOTE #13 TO SEAL ALL PARTS - INSERT COLUMN IN CHART & REVISED CHART	4078E
	ALL PARTS - REMOVED THREADED INSERT & ADDED NOTE #20 - ADDED NOTE #21 - ADDED THREADED INSERT & STRIP PIN - CABLE	4110E
	(MARKET)-99 - ADDED FAX TO INSERT MOLD - ADDED NOTE #18 - ADDED TERMINAL PIN - ADDED TERMINAL INSERT MOLD CALLOUT	4130E
	(BRAZIL) - SEAL #45 (WHITE)	4150E
	(PORTER) - RELEASED	4160E
	(BRAZIL) - UPDATE ADD #2000	4170E
	ALL VEHICLE PARTS - DRAWING MADE AVC TO1 AND CONN AS A MATE SLD HEADER	4210E

ZONE	REVISION HISTORY	ECN
	ALL PARTS - RELEASED	4242E
	(MARKET)-99 - FACE SEAL #46 (WHITE)	4249E
	ALL PARTS - ADED SCREW BOSS PAD #1 (SEAL FOR 2 PLCS), SCREW BOSS PAD #2 (SEAL FOR 2 PLCS), SCREW BOSS PAD #3 (SEAL FOR 1 PLC), SCREW BOSS PAD #4 (SEAL FOR 1 PLC), ADDED NOTES #8 & #13 & ADDED SHEET 2	4260E
	ALL PARTS - FOR #13 ADD SEAL FOR 2ND ROW OF CONN - SEE SHEET 2 FOR DETAILS & NOTE #13	4267E
	ALL PARTS - ADDED NOTE #22	4271E
	ALL PARTS - ADDED SCREW BOSS PAD #5 (SEAL FOR 1 PLC), SCREW BOSS PAD #6 (SEAL FOR 1 PLC), CHANGED SCREW BOSS PAD #4 TO SEALING PADDLE NOTE & SHEET 1 TO SEAL	4276E
	(MARKET)-99 - RELEASED ALL PARTS - CHANGED NOTE #13 TO SEAL ALL PARTS - INSERT COLUMN IN CHART & REVISED CHART	4278E
	ALL PARTS - REMOVED THREADED INSERT & ADDED NOTE #20 - ADDED NOTE #21 - ADDED THREADED INSERT & STRIP PIN - CABLE	4310E
	(MARKET)-99 - ADDED FAX TO INSERT MOLD - ADDED NOTE #18 - ADDED TERMINAL PIN - ADDED TERMINAL INSERT MOLD CALLOUT	4330E
	(BRAZIL) - SEAL #45 (WHITE)	4350E
	(PORTER) - RELEASED	4360E
	(BRAZIL) - UPDATE ADD #2000	4370E
	ALL VEHICLE PARTS - DRAWING MADE AVC TO1 AND CONN AS A MATE SLD HEADER	4410E

NOTES

1. UNLESS OTHERWISE SPECIFIED AND/OR INDICATED:
   DIMENSIONS ARE TO FACE OF VIEW SHOWN AND INCLUDE PLATING, COATING, OR FINISH. INSPECTION FOR WITH-MOLD FEATURES (SUPERVISOR) FOR ALL OTHER DIMENSIONS NOT SHOWN BUT REQUIRED FOR TOOL BUILD, SEE MATH MODEL FOR PRECISE TOOL PATH DATA.
2. MATERIAL RECYCLING CODE PER ISO 11469: (1-3)X10.(1 CHARACTERS AS SHOWN TO BE LOCATED ON ANY EXTERIOR SURFACE.
3. REFERENCE MATING COMPONENTS OR EQUIVALENT:
   CONNECTOR ASSEMBLY TAI - 1347(1)&3.
4. (1)X10(1) DELPHI CORPORATE BRAND TO BE LOCATED ON ANY EXTERIOR SURFACE, PREFERABLY VISIBLE AT FINAL ASSEMBLY. OPTIONAL CONSTRUCTION FOR EXISTING TOOLING MAY BE "PRO".
5. THIS PART USED IN CONTINENTAL MODULE. REFER TO CHART FOR PART NUMBER.
6. THIS PART IS NOT CONTROLLED FOR AUTOMATIC FEEDING.
7. PARTS TO BE SHIPPED IN TRAY NO. C0014374 OR EQUIVALENT.
8. MATING INTERFACE: PRINTED CIRCUIT BOARD INTERFACE AND TONGUE & GROOVE FEATURE ARE VERIFIED BY APPROVED GAUGES FOR FUNCTIONAL FIT PER CONTROL PLAN.
9. SOLDERING PROCESS TO BE SELECTIVE WAVE SOLDER.
10. CONNECTOR MUST CONFORM TO CONTINENTAL SOLDERABILITY TEST NUMBER
11. PARTS ARE TO BE FREE OF ANY CONTAMINATES, OILS, DEBRIS ESPECIALLY THE KEY AREAS OF OTHER MATTER THAT MAY INTERFERE WITH SOLDERING, ASSEMBLY, FUNCTIONALITY OR AESTHETICS.
12. CUSTOMER CONNECTOR SPECIFICATION A0933N06A TO BE MOLDED IN THIS AREA. MUST BE OPPOSITE GATE IDENTIFICATION.
13. CAPABILITY STUDIES REQUIRED ON DIMENSIONS D6, D7, D8 & D7. DIMENSION D7 & D8 ARE VERIFIED FOR FUNCTIONAL FIT PER THE CONTROL PLAN.
14. REFERENCE CUSTOMER SPECIFICATION A0933N06A FOR ADDITIONAL REQUIREMENTS.
15. SCREW BOSS PADS TO BE INSPECTED 1-6 STARTING IN THE UPPER LEFT HAND CORNER, TOP ROW NUMBERED LEFT TO RIGHT, BOTTOM ROW NUMBERING TO 10 LEFT TO RIGHT FOR ALL FUNCTIONAL INSPECTIONS.
16. NO REGRIND OF PLASTIC ANODEL MATERIAL ALLOWED.
17. CAVITY ID TO BE LOCATED IN THIS AREA.
18. TO ESTABLISH DATUM F, FIRST MEASURE THE HIGHEST POINT ON EACH OF THE SIX SURFACES. DO THE HIGHEST POINTS MEASURED TO FORM DATUM F, ONE OF THE HIGHEST POINTS MUST BE ON THE OPPOSITE SIDE OF THE PART FROM THE OTHER TWO POINTS.
19. TO ESTABLISH DATUM E, FIRST MEASURE THE HIGHEST POINT ON EACH OF THE SIX SURFACES. DO THE THREE HIGHEST POINTS MEASURED TO FORM DATUM E, ONE OF THE HIGHEST POINTS MUST BE ON THE OPPOSITE SIDE OF THE PART FROM THE OTHER TWO POINTS.
20. CHOOSE THE HIGHEST POINT ON EACH OF THE SIX DATUM T SURFACES TO ESTABLISH THE MEASUREMENT POINT OF ORIGIN.
21. CHOOSE THE HIGHEST POINT ON EACH OF THE SIX DATUM K SURFACES TO ESTABLISH THE MEASUREMENT POINT OF ORIGIN.
22. PLASTIC MATERIAL MUST BE AMODEL AS-4133 HS BK 324.

THIS DRAWING IS THE PROPERTY OF DELPHI AUTOMOTIVE SYSTEMS CORPORATION AND CONTAINS TRADE SECRET AND OTHER PROPRIETARY INFORMATION. NO RIGHTS TO THE DESIGN, PARTS OR OTHER INFORMATION SHOWN OR DESCRIBED HEREIN ARE TRANSFERRED BY RECEIPT OR POSSESSION OF THIS DRAWING. REPRODUCTION, REPRODUCTION, DISTRIBUTION OR DISCLOSURE TO OTHERS OF THE DESIGN OR INFORMATION CONTAINED HERE IN IS PROHIBITED.

DELPHI
DELPHI PACKARD ELECTRICAL/ELECTRONIC ARCHITECTURE
GRAYSLAKE DRIVE, GRAYSLAKE, IL 60030-1056
THIS DRAWING IS CONFIDENTIAL AND PROPRIETARY TO DELPHI. ALL RIGHTS ARE RESERVED. NO PART OF THIS DRAWING MAY BE REPRODUCED OR TRANSMITTED IN ANY FORM OR BY ANY MEANS, ELECTRONIC, MECHANICAL, OR OTHERWISE, WITHOUT THE PRIOR WRITTEN PERMISSION OF DELPHI.

PART DRAWING

DRAWN	12/12/08
APPROVED	12/12/08
CHECKED	12/12/08
DRAWN BY	CHRISTOPHER CLAYTON
APPROVED BY	JAMES DONOHUE
CHECKED BY	
SIZE	
SCALE	
DIMENSIONS IN INCHES UNLESS OTHERWISE SPECIFIED	
DO NOT SCALE DRAWING	
DIMENSIONS IN BRACKETS ARE IN MILLIMETERS	
DIMENSIONS IN MILLIMETERS UNLESS OTHERWISE SPECIFIED	
TITLE	
TAI 45M CONN 60 M HES 1.5 SLD HEADER	

DELPHI PART NO.	3706532
DELPHI PART NO.	3706532

X-ON Electronics

Largest Supplier of Electrical and Electronic Components

Click to view similar products for Automotive Connectors ***category:***

Click to view products by APTIV ***manufacturer:***

Other Similar products are found below :

003-018-000 60403001 60993906-B 629515004020001 M902-2131 M902-2161 72.330.1035.1 73.353.4028.0 F119300-B F166900 F258300-B F358300-B F407400 F444110 F487000 F509500B-B 827153-1 8N1515-32-24P 9-1326729-8 925474-1 928905-1 964562-4 968782-1 GT17SA-8DS-HU 98891-1012 98947-1016 12004475-L 12010290 12010309-B 12015454 12020219-B 12020308 12041318-B 12052225-L 12052466 12059125 12064869 12004327-B 12010503-B 12015308 12015384 12015909 1-21030-1 12041254 12041318 12047946-B 12047957 12047957-L 12059473 12066261