SYMBOL DEFINITION		MISSING SYMBOLS
A DIMENSION WITHOUT AN INSPECTION REPORT SYMBOL (☐) DOES NOT REQUIRE INSPECTION. IT MAY BE CONTROLLED ON THE INDIVIDUAL COMPONENT DRAWING.	TOTAL NO OF INSPECTIONS REQUIRED: 92	NO MISSING SYMBOL NUMBER
	LAST NO. USED: 28	

DWG STATUS DATE	STS	RD	N/P	CHG	ZONE	REVISION HISTORY	AUTH	DR	APVD	APVD
31JA05	R	19	-	-	-	CLEARED REV COL AND REDRAWN TO PDI 13516907, 13521474 & 13521478 - RELEASED	264071	DPS	JWP	WR
05APO7	R	20	-	-	-	15332150, 15332158, 15332174 & 15321182 - UPDATED PDM ATTRIBUTES	401059	RTV	JWP	PYP

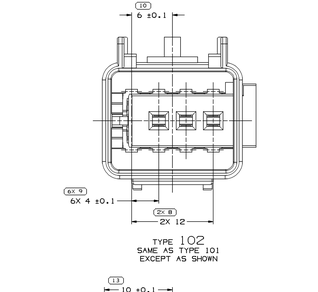

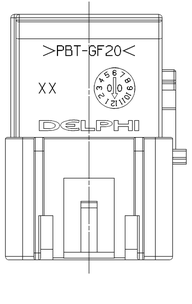

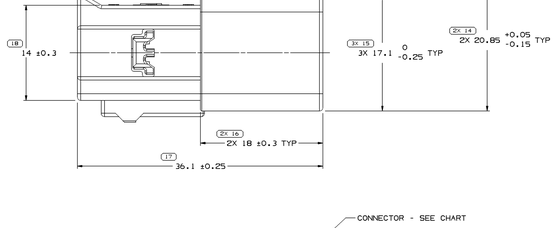

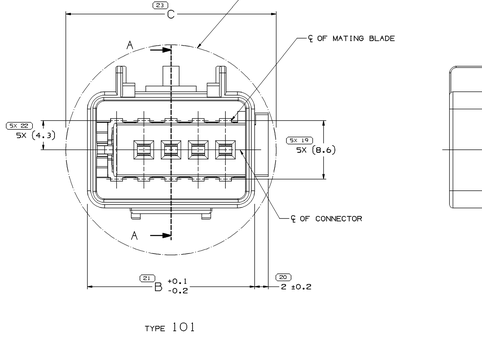

TYPE 101

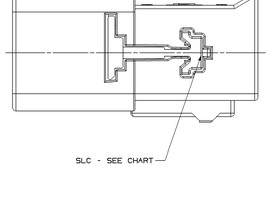

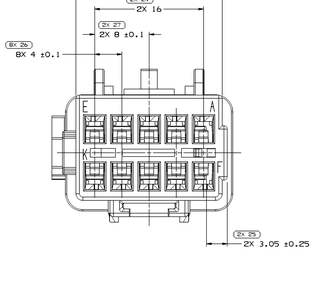

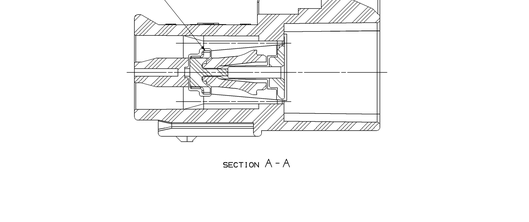

SECTION A - A

NOTES

1. UNLESS OTHERWISE SPECIFIED AND/OR INDICATED:

   DIMENSIONS ARE TO FACE OF VIEW SHOWN AND AUTOMATICALLY ROUNDED BY COMPUTER FOR INSPECTION (SEE MATH MODEL FOR PRECISE DIMENSIONS). FOR ALL OTHER DIMENSIONS NOT SHOWN BUT REQUIRED FOR TOOL BUILD, SEE MATH MODEL FOR PRECISE TOOL PATH DATA.

2. SEALING CODE O - UNSEALED

3. REFERENCE MATING COMPONENTS OR EQUIVALENT:

   TAXI ASM CONN F GT 150 15326980

4. THIS PART ACCEPTS THE FOLLOWING COMPONENTS OR EQUIVALENT:

   CAVITIES ESD00153 TO ACCEPT 15304702 TERMINAL

5. DO NOT USE I, O, Q, U AS CAVITY LETTERS

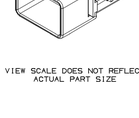

VIEW SCALE DOES NOT REFLECT ACTUAL PART SIZE

PART NO	REV	N/P	DATE	STATUS	TYPE	CAVITIES	CONNECTOR	MATERIAL RECYCLING CODE	SLC	MATING CONNECTOR W/O CPA	MATING CONNECTOR W/CPA	A	B	C ±0.4
13516907	01	-	28JA05	-	105	16	13516906	PBT-20GF	15332183	13516905	-	33.5 ±0.4	36.6	41
13521478	01	-	28JA05	-	104	14	13521477	PBT-20GF	15321175	13521476	-	29.5 ±0.4	32.6	37
13521474	01	-	28JA05	-	102	8	13521473	PBT-20GF	15321151	13521472	-	17.5 ±0.3	20.6	28
15332182 / ID405541	04	AA	05AU99	-	105	16	15332181 / ID405539	PA6-GB20 GF10	15332183 / ID405540	15332177 / ID405537	15332178 / ID405538	33.5 ±0.4	36.6	41
15332174 / ID405534	04	AA	05AU99	-	104	14	15332173 / ID405532	PA6-GB20 GF10	15332175 / ID405533	15332169 / ID405530	15332170 / ID405531	29.5 ±0.4	32.6	37
15459913	01	-	06MY03	-	103	12	15459922	PBT-20GF	15332167 / ID405526	15459912	-	25.5 ±0.4	28.6	33
15332166 / ID405527	04	-	05AU99	-	103	12	15332165 / ID405525	PA6-GB20 GF10	15332167 / ID405526	15332161 / ID405523	15332162 / ID405524	25.5 ±0.4	28.6	33
15332150 / ID405519	04	AA	05AU99	-	102	8	15332149 / ID405517	PA6-GB20 GF10	15332151 / ID405518	15332145 / ID405514	15332146 / ID405515	17.5 ±0.3	20.6	28
15459917	01	-	06MY03	-	101	10	15459949	PBT-20GF	15332159 / ID405306	15459918	-	21.5 ±0.3	24.6	30
15332158 / ID405307	04	AA	05AU99	-	101	10	15332157 / ID405305	PA6-GB20 GF10	15332159 / ID405306	15332153 / ID405304	15332154 / ID405516	21.5 ±0.3	24.6	30

OPERATION NUMBER	SIZE	SCALE	IMAGE SET	SHEET	SHEETS	REV	SKIP
15326984	A1x3	5:1	2 OF 2	1 OF 1	R	20	-

(14) PROCESS SENSITIVE DIMENSION
DIMENSIONS ENCLOSED IN ( ) INDICATE REFERENCE DIMENSIONS, NOT AN TOLERANCE LIMIT IN ANY ESTABLISHED

| AS INDICATED, ROUND UNLS | | |

X-ON Electronics

Largest Supplier of Electrical and Electronic Components

Click to view similar products for Automotive Connectors ***category:***

Click to view products by APTIV ***manufacturer:***

Other Similar products are found below :

003-018-000 60993906-B M902-2131 M902-2161 M902-2344 72.330.1035.1 73.353.4028.0 F166900 F358300-B F407400 776880-1 827153-1 8N1515-32-24P 9-1326729-8 925474-1 928905-1 964562-4 968782-1 98891-1012 12004475-L 12020308 12041318-B 12052466 12064869 12015909 1-21030-1 12041254 12041318 12047946-B 12110546-B 12131792 12084688 12092346 HD34-18-14PT HD46-24-23SN-059 HDB36-24-16PN-059 HDP26-24-9SE-L015 12185280 12185550 12336-12 12191172-B 12S 13545280 13577943 13681974 13737722-B 13830674 13832576 13849772 13542772