SYMBOL DEFINITION			MISSING NUMBERS
A DIMENSION WITHOUT AN INSPECTION REPORT SYMBOL ( ) DOES NOT REQUIRE INSPECTION. IT MAY BE CONTROLLED ON AN INDIVIDUAL COMPONENT DRAWING.	TOTAL NO. OF SYMBOLS ON DRAWING	5	
	LAST NO. USED	10	

DWG STATUS					ZONE	REVISION HISTORY	AUTH	DR	APVD	APVD
DATE	SYS	REV	N/P	CHG					1	2
04APO2	R	01	-	-	-	RELEASED	223414	RH	RH	JM
24MY02	R	02	-	-	-	UPDATED ASSEMBLY	225798	CJC	CJC	MM
12FEO4	R	02	AA	-	-	ASM CONN COLOR WAS BLK IN TITLE BLOCK	251532	JS	JS	TM
05MY04	R	02	AB	-	-	ADDED DIM 44+/-0.2 VIEW FOR HARNESS ASSEMBLY AND UPDATED SHORTING CLIP	254149	JBD	FXV	MR
23AUO4	R	02	AC	-	-	DIM 1-2 WAS 8.43 MIN.	258279	MB	MB	TM

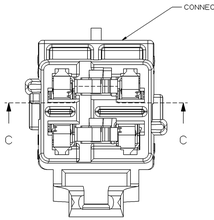

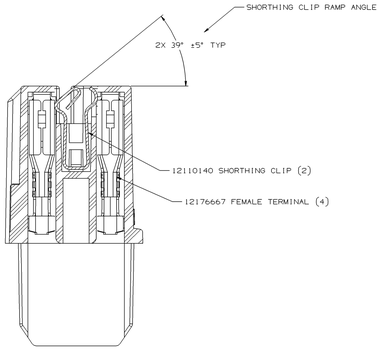

SECTION C-C

HARNESS ASSEMBLY MANUFACTURING INFORMATION

CONNECTOR ASSEMBLY WITH TERMINALS AND SHORTING CLIP INSTALLED

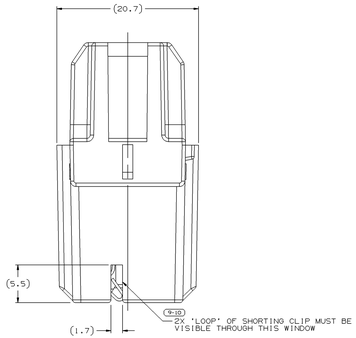

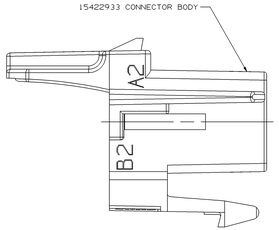

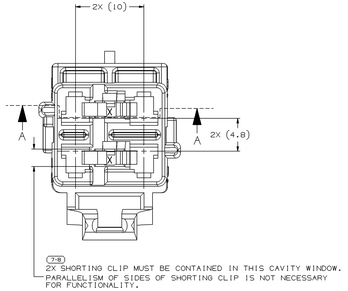

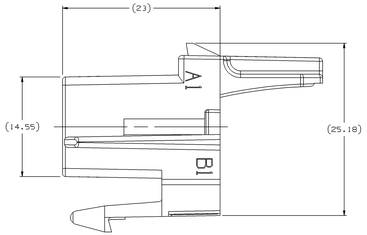

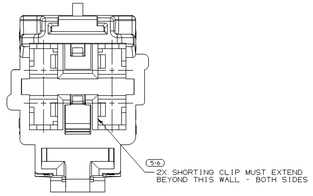

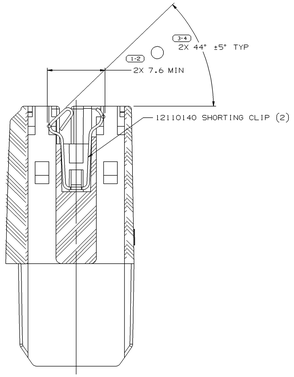

SECTION A-A

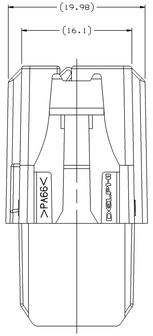

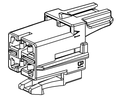

VIEW SCALE DOES NOT REFLECT
ACTUAL PART SIZE

NOTES

1. UNLESS OTHERWISE SPECIFIED AND/OR INDICATED:
   DIMENSIONS ARE TO FACE OF VIEW SHOWN AND
   AUTOMATICALLY ROUNDED BY COMPUTER FOR INSPECTION
   (SEE MATH MODEL FOR PRECISE DIMENSIONS). FOR ALL
   OTHER DIMENSIONS NOT SHOWN BUT REQUIRED FOR TOOL
   BUILD, SEE MATH MODEL FOR PRECISE TOOL PATH DATA.
2. MATING COMPONENTS:
   CONNECTOR 15336476 OR EQUIVALENT
   TERMINAL 12176667
   CONNECTOR POSITION ASSURANCE LOCK 12052834 OR EQUIVALENT
   TPA 12176632 OR EQUIVALENT.
3. SEALING CODE O.
4. ASSEMBLE CLIPS SECURELY IN CONNECTOR BODY.

DRAWING NUMBER							
15422934							
SIZE	SCALE	FRAME NO	SHEET NO	STG	REV	N/P	
A1x3	5:1	2 OF 2	1 OF 1	R	02	AC	

(N/A) PROCESS SENSITIVE DIMENSION	
DIMENSIONS ENCLOSED IN ( ) ARE FOR REFERENCE ASSISTANCE AND NO TOLERANCE LIMITS ARE ESTABLISHED.	REFERENCE

R 0.1 MAX
R 0.2 MAX
SHARP CORNER TOLERANCE

DIMENSIONAL RANGE (MM)								
FROM	0	>6	>10	>30	>100	>200	>300	>400
TO	6	10	30	100	150	200	300	400
TOLERANCE UNLESS OTHERWISE SPECIFIED								
±0.15	±0.2	±0.3	±0.4	±0.5	±0.6	±1	±1.2	±2
ANGULAR TOLERANCE ±2°								

THIRD ANGLE PROJECTION

DO NOT SCALE

USE MATH DATA

DWG TYPE	PART DRAWING
STYLE	
VOLUME (CM³)	DESIGN CODE
MASS (GM) 6/900	

UNLESS OTHERWISE SPECIFIED

THIS DOCUMENT IS IN ACCORDANCE WITH ASME Y14.5M-1994 UNLESS OTHERWISE SPECIFIED. DIMENSIONS ARE TO TOLERANCE MINIMUM + (PM). ALL GEOMETRIC TOLERANCES AND RELATED DATUMS APPLY WITH - BASE FEATURES FORM AT MAXIMUM MATERIAL CONDITION. DIMENSIONS ARE TO BE ADHERED TO AFTER FINISH BY INSPECTION OR LOCATION TOLERANCES. DIMENSIONS FOR LOCATIONS MUST BE MADE SEPARATELY. DIMENSIONS ARE TO BE ADHERED TO.
ALL DIMENSIONS ARE IN MILLIMETERS

DELPHI

DELPHI PACKARD ELECTRIC SYSTEMS
WARREN, OH

		DATE
DR		
APVD1	ROBERT HURD	04APO2
APVD2	ROBERT HURD	04APO2
APVD3	JEFF MENDENHALL	11APO2
APVD4		
APVD5		

SUBSTANCES OF CONCERN AND RECYCLED CONTENT PER DELPHI-K 1094900

MATERIAL
SEE DRAWING

DRAWING NAME
ASM CONN 4 F M/P 280 YEL

DRAWING NUMBER							
15422934							
SIZE	SCALE	FRAME NO	SHEET NO	STG	REV	N/P	
A1x3	5:1	1 OF 2	1 OF 1	R	02	AC	

12422934

X-ON Electronics

Largest Supplier of Electrical and Electronic Components

Click to view similar products for Automotive Connectors ***category:***

Click to view products by APTIV ***manufacturer:***

Other Similar products are found below :

003-018-000 60403001 60993906-B 629515004020001 M902-2131 M902-2161 72.330.1035.1 73.353.4028.0 F119300-B F166900 F258300-B F358300-B F407400 F444110 F487000 F509500B-B 827153-1 8N1515-32-24P 9-1326729-8 925474-1 928905-1 964562-4 968782-1 GT17SA-8DS-HU 98891-1012 98947-1016 12004475-L 12010290 12010309-B 12015454 12020219-B 12020308 12041318-B 12052225-L 12052466 12059125 12064869 12004327-B 12010503-B 12015308 12015384 12015909 1-21030-1 12041254 12041318 12047946-B 12047957 12047957-L 12059473 12066261