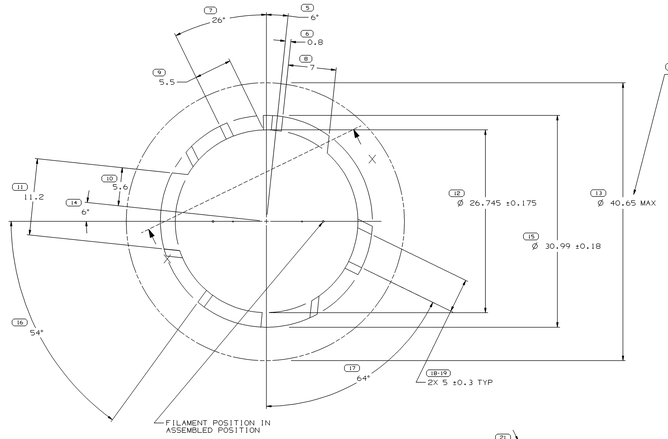

MOUNTING HOLE
VIEW SHOWING INSIDE OF LAMP HOUSING

PREFERRED CONSTRUCTION

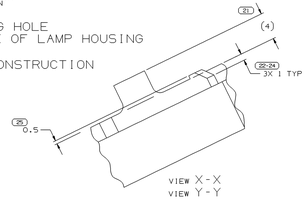

VIEW X-X
VIEW Y-Y

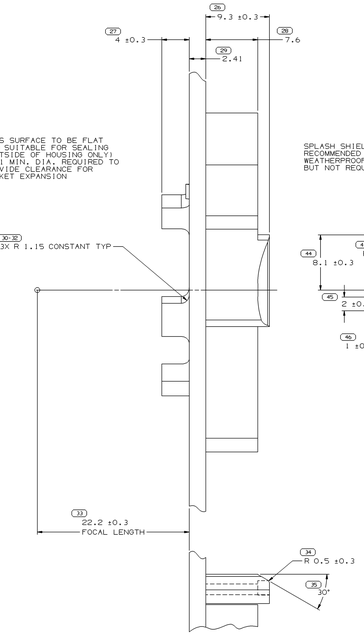

STANDARD MOUNTING HOLE

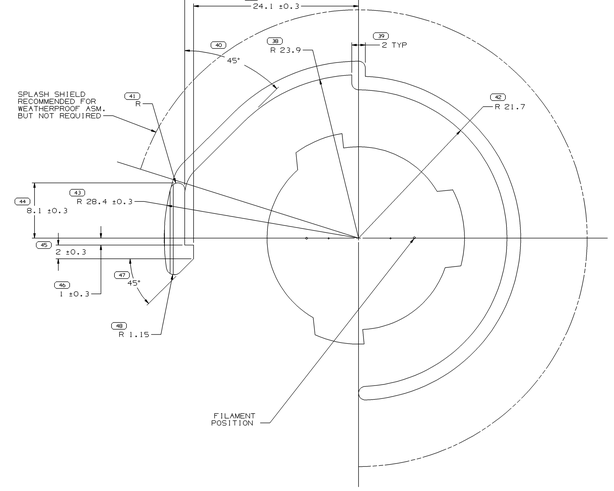

VIEW OF MOUNTING HOLE LOOKING AT
THE REAR OF LAMP HOUSING

PREFERRED CONSTRUCTION

SYMBOL DEFINITION		MISSING NUMBERS
A DIMENSION WITHOUT AN INSPECTION REPORT SYMBOL ( ) DOES NOT REQUIRE INSPECTION. IT MAY BE CONTROLLED ON AN INDIVIDUAL COMPONENT DRAWING.	TOTAL NO. OF SYMBOLS ON DRAWING: 43	
	LAST NO. USED: 48	

DWG STATUS DATE	STS	REV	N/P	CHG	ZONE	REVISION HISTORY	AUTH	DR	APVD 1	APVD 2
15APO2	R	04	-	-		CLEARED REV COL & 15435155 - RELEASED	223737	LOA	TRO	MF
15MY02	R	05	-	-		ALL PARTS - SECONDARY LOCK WAS 12064935 & REVISED ECL	225376	EVV	EVV	MF
26JL02	R	06	-	-		ALL PARTS - REVISED MAT'L SPEC & 15435155 - ADDED TYPE 102	228368	TLD	TLD	MEF
01AU02	R	07	-	-		12092379 - REV LEV WAS A8	228788	HAM	HAM	MEF
10SE02	R	08	-	-		15435155 - UPDATED PDM ATTRIBUTES	230438	HAM	HAM	MEF
25AU03	R	09	-	-		12092379 & 12186065 - INACTIVE, USE 15435155	235312	CJP	CJP	MEF
17DE03	R	10	-	-		12092379 & 12186065 - PREFERRED CONSTRUCTION WAS TYPE 101; 15435155 - REVISED GRAPHICS & OPTIONAL CONSTRUCTION WAS TYPE 102 AND 15485094 - RELEASED	249818	AMC	AMC	MEF
06APO4	R	11	-	-		15485094, 15435155 - REVISED FOCAL LENGTH DIM	253609	ADK	ADK	MEF

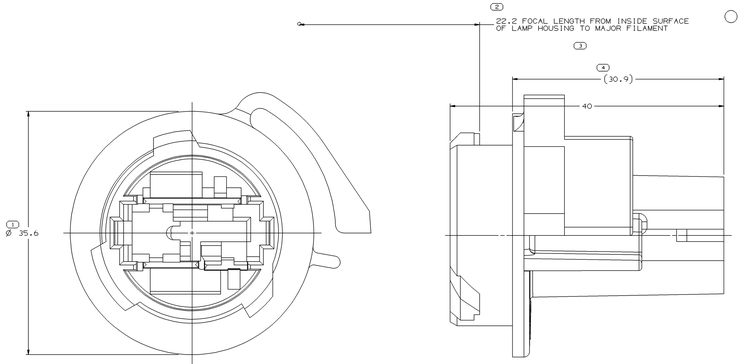

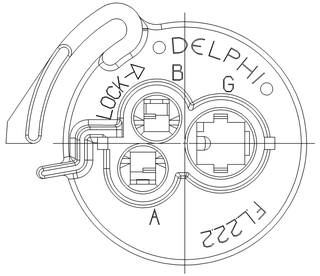

○ PREFERRED CONSTRUCTION

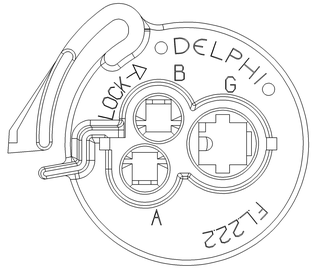

OPTIONAL CONSTRUCTION

NOTES

1. UNLESS OTHERWISE SPECIFIED AND/OR INDICATED:
   DIMENSIONS ARE TO FACE OF VIEW SHOWN AND AUTOMATICALLY ROUNDED BY COMPUTER FOR INSPECTION. (SEE MATH MODEL FOR PRECISE DIMENSIONS.) FOR ALL OTHER DIMENSIONS NOT SHOWN BUT REQUIRED FOR TOOL BUILD, SEE MATH MODEL FOR PRECISE TOOL PATH DATA.
2. THIS PART ACCEPTS THE FOLLOWING COMPONENTS OR EQUIVALENT:
   CAVITIES "A" AND "B" TO ACCEPT 12092058 TERMINAL
   CAVITY "G" TO ACCEPT 12092030 TERMINAL
   SECONDARY LOCK 15305473
   GASKET 12020720
   BULB 09441839
3. MATERIAL RECYCLING CODE >PA66< PER SAE J1344. (2.3)X(0.1) RAISED CHARACTERS AS SHOWN TO BE LOCATED ON ANY EXTERIOR SURFACE. OPTIONAL CONSTRUCTION TO BE NO MATERIAL RECYCLING CODE.
4. (2.3)X(0.1) RAISED DELPHI CORPORATE BRAND TO BE LOCATED ON ANY EXTERIOR SURFACE, PREFERABLY VISIBLE AT FINAL ASSEMBLY. OPTIONAL CONSTRUCTION TO BE "PED" OR NO LOGO.

15485094	01	AA		M2279001 PA66 GF14 HS IM-BLK	9.741	OPTIONAL
15435155	02	AA		M2279026 PA66 GF14 HS IM - CAD GRY	9.741	OPTIONAL
12186065	A7	-	INACTIVE	M2280001 PA66 MF HS-BLK	9.714	PREFERRED
12092379	B10	-	INACTIVE	M2280002 PA66 MF HS-NAT	9.714	PREFERRED
PART NO	REV	N/P	STATUS	MATERIAL SPECIFICATION AND COLOR	VOLUME	CONSTRUCTION

R 0.2 MAX — R 0.1 MAX — SHARP CORNER TOLERANCE

DIMENSIONAL RANGE (MM)									
.0 TO	6	>6 TO	30	>30 TO	100	>100 TO	200	>200 TO	400	>400
TOLERANCE UNLESS OTHERWISE SPECIFIED									
±0.15	±0.2	±0.3	±0.4	±0.5	±0.6	±1	±1.2	±2	
ANGULAR TOLERANCE ±2°									

(1) PROCESS SENSITIVE DIMENSION

DIMENSIONS ENCLOSED IN ( ) INDICATE REFERENCE DIMENSIONS AND NO TOLERANCE LIMITS ARE ESTABLISHED.

THIRD ANGLE PROJECTION

DO NOT SCALE

USE MATH DATA

DRAWING NUMBER							
12186066							
SIZE	SCALE	FRAME NO	SHEET NO	STG	REV	N/P	
A1x3	5:1	2 OF 2	1 OF 1	R	11	-	

PART TYPE: PART DRAWING
STYLE
VOLUME (CM³): SEE CHART
SYSTEM CODE
MATRIX: 6901

UNLESS OTHERWISE SPECIFIED

THIS DOCUMENT IS IN ACCORDANCE WITH ASME Y14.5M-1994 UNLESS OTHERWISE SPECIFIED. ALL GEOMETRIC TOLERANCES APPLY AT MMC. ALL GEOMETRIC TOLERANCES AND RELATED DATUMS APPLY AT MMC. MAKE REFERENCE FORM #1 TO ASME Y14.5M-1994 FOR DEFINITION OF TERMS. DIMENSIONS TO BE ESTABLISHED BY PROJECTION OR LOCATION TOLERANCES. ALL DIMENSIONS ARE TO BE MEASURED INDEPENDENT, REGARDLESS OF DATUM REFERENCE.
ALL DIMENSIONS ARE IN MILLIMETERS

REFERENCE

APVD1 CHUCK PAPAS 20MEP05
APVD2 CHUCK PAPAS 20MEP05
APVD3 TERESA BLAKE 21MEP05
APVD4
APVD5

SUBSTANCES OF CONCERN AND RECYCLED CONTENT PER DELPHI-A (09490)

MATERIAL: SEE CHART

DELPHI
DELPHI PACKARD ELECTRIC SYSTEMS
WARREN, OH

	DATE
DR	
APVD1 CHUCK PAPAS	20MEP05
APVD2 CHUCK PAPAS	20MEP05
APVD3 TERESA BLAKE	21MEP05
APVD4	
APVD5	

DRAWING NAME: TAXI CONN LP SOC WEDGE N/A W3

DRAWING NUMBER							
12186066							
SIZE	SCALE	FRAME NO	SHEET NO	STG	REV	N/P	
A1x3	5:1	2 OF 2	1 OF 1	R	11	-	

12186066

X-ON Electronics

Largest Supplier of Electrical and Electronic Components

Click to view similar products for Automotive Connectors ***category:***

Click to view products by APTIV ***manufacturer:***

Other Similar products are found below :

003-018-000 60403001 60993906-B 629515004020001 M902-2131 M902-2161 72.330.1035.1 73.353.4028.0 F119300-B F166900 F258300-B F358300-B F407400 F444110 F487000 F509500B-B 827153-1 8N1515-32-24P 9-1326729-8 925474-1 928905-1 964562-4 968782-1 GT17SA-8DS-HU 98891-1012 98947-1016 12004475-L 12010290 12010309-B 12015454 12020219-B 12020308 12041318-B 12052225-L 12052466 12059125 12064869 12004327-B 12010503-B 12015308 12015384 12015909 1-21030-1 12041254 12041318 12047946-B 12047957 12047957-L 12059473 12066261