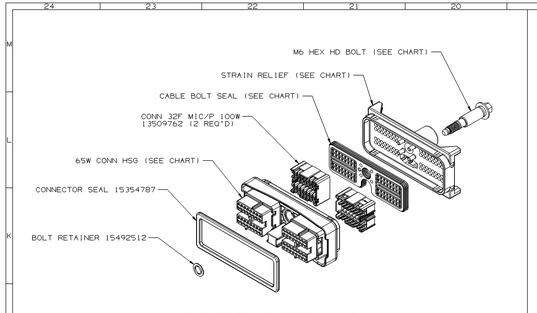

EXPLODED ASSEMBLY VIEW
SCALE [1]

SYMBOL DEFINITION		
A DIMENSION WITHOUT AN INSPECTION REPORT SYMBOL DOES NOT REQUIRE INSPECTION. IT MAY BE CONTROLLED ON THE INDIVIDUAL COMPONENT DRAWING.	TOTAL NO OF INSPECTIONS REQUIRED	13
	LAST NO. USED	13

MISSING SYMBOLS
NO MISSING SYMBOL NUMBER

DWG STATUS					ZONE	REVISION HISTORY	AUTH	DR	APVD	APVD
DATE	STG	REV	N/P	CHG					1	2
18MY04	R	01	-	-		WAS PE117695 - RELEASED	251997	RH	RH	KRD
09SE04	-	02	-	-		ALL PARTS - UPDATED ASSEMBLIES TO CORRECT CONNECTOR AND COLOR: INNER CONNECTOR WAS 15401560: ADDED NOTE #10	257463	AK	AK	KRD
16MY05	R	03	-	-		ALL PARTS - BOLT RETAINER WAS 12004737 AND REVISED NOTE #7	268066	CCV	FR	KRD

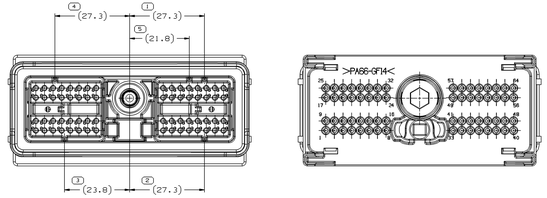

TYPE 102
SAME AS TYPE 101
EXCEPT AS SHOWN

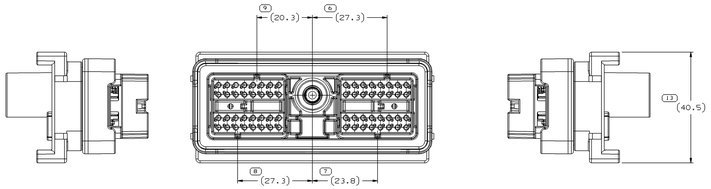

TYPE 101

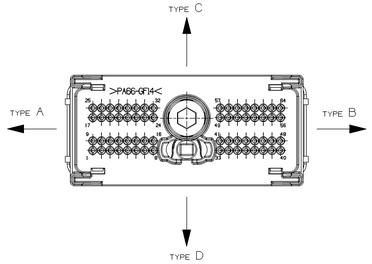

WIRE DRESS DEFINITION

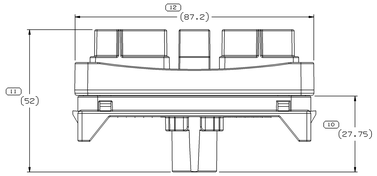

NOTES

1. UNLESS OTHERWISE SPECIFIED AND/OR INDICATED:
   DIMENSIONS ARE TO FACE OF VIEW SHOWN AND AUTOMATICALLY ROUNDED BY COMPUTER FOR INSPECTION (SEE MATH MODEL FOR PRECISE DIMENSIONS). FOR ALL OTHER DIMENSIONS NOT SHOWN BUT REQUIRED FOR TOOL BUILD, SEE MATH MODEL FOR PRECISE TOOL PATH DATA.
2. SEALING CODE 3 - DESIGN WILL PASS SALT FOG AND IMMERSION TEST AFTER CONDITIONING AS SPECIFIED IN ESA-644 (WEATHER-PACK),ESA-710 (METRI-PACK), ESA-650 (UNDERHOOD MICRO-PACK), C-4006 (WORLD CONNECTOR), ETC WHEN MATED TO MATING PART OR EQUIVALENT
3. THIS PART IS NOT CONTROLLED FOR AUTOMATIC FEEDING.
4. REFERENCE MATING COMPONENTS OR EQUIVALENT:
   SEE PE119328 MATING CONFIGURATION REQUIREMENTS DRAWING
   MATING HEADER ASSEMBLY - 15463914
5. THIS PART ACCEPTS THE FOLLOWING HARNESS COMPONENTS OR EQUIVALENT:
   WIRE DRESS COVER - SEE CHART
   SECONDARY TERMINAL LOCK MIC/P 100W - 15404650 (2 REQ'D)
   100W CAVITY PLUG - 12129557
6. CAVITIES ACCEPT THE FOLLOWING TERMINALS OR EQUIVALENT:
   CAVITIES 1-64 MIC/P 100W TO ACCEPT 18 GAUGE 15359002 OR EQUIVALENT
   20,22 GAUGE 15359001 OR EQUIVALENT
7. USE M7 (7MM) HEX-HEAD DRIVE SOCKET
   MAX BOLT TORQUE 6 N-m.
   MIN BOLT TORQUE 4 N-m.
8. CONNECTOR SEAL MUST SIT FLUSH WITH INSIDE FACE OF CONNECTOR. CONNECTOR SEAL MUST NOT BE ROLLED OR TWISTED.
9. FOR OPEN SEAL CAVITIES, SEE CHART.
10. ALL CAVITIES ACCEPT A MAX. INSULATION CRIMP OF 2.3 HIGH AND 2.3 WIDE (2.42 MAX CABLE O.D.) REFER TO ES-A-605 FOR CRIMP DIMENSIONS.

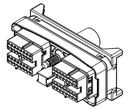

PART NO	STG	REV	N/P	STATUS	TYPE	DESCRIPTION	OPEN CABLE SEAL CAVITIES	CONN HSG PART NUMBER	CONN HSG COLOR	CABLE SEAL PART NUMBER	CABLE SEAL COLOR	CABLE O.D. RANGE	BOLT P/N	STRAIN RELIEF PART NUMBER	STRAIN RELIEF COLOR	TYP CABLE DRESS TYPE	MATING WIRE DRESS COVER (DRESS TYPE) OR EQUIVALENT
15488668	R	03	-		102	64W CONN ASM	1 THRU 64	15488662	DARK BLUE	15489396	LT BLUE	2.26-2.42	15488665	15488663	GRAY	D OR C	15488664 (DRESS D1/TBD (DRESS C)
15488667	R	03	-		101	64W CONN ASM	1 THRU 64	15488661	GRAY	15489396	LT BLUE	2.26-2.42	15488665	15488663	GRAY	D OR C	15488664 (DRESS D1/TBD (DRESS C)

DRAWING NUMBER 15488666
SIZE A1x3 | SCALE 2:1 | FRAME NO Z | SHEET NO 1 OF 1 | STG R | REV 03 | N/P -

(N/A) PROCESS SENSITIVE DIMENSION

DIMENSIONS ENCLOSED IN A PARENTHESIS REPRESENT REFERENCE DIMENSIONS AND NO TOLERANCE LIMITS ARE ESTABLISHED.

DIMENSIONAL RANGE (MM)								
0.00	6.00	30	120	>100	>200	>300	>400	>500
TO	30	120	400	200	300	400	500	600
TOLERANCE UNLESS OTHERWISE SPECIFIED								
±0.15	±0.3	±0.4	±0.6	±0.8	±1.0	±1.2	±1.4	±1.6
ANGULAR TOLERANCE ±2°								

REFERENCE

THIRD ANGLE PROJECTION

DO NOT SCALE

USE MATH DATA

DELPHI

DELPHI PACKARD ELECTRIC SYSTEMS
WARREN, OH

	DATE
DR	
APVD1 ROBERT HUPO	18MY04
APVD2 ROBERT HUPO	18MY04
APVD3 KARL GRZENA	20MY04
APVD4	
APVD5	

SUBSTANCES OF CONCERN AND RECYCLED CONTENT PER DELPHI (09490G)

MATERIAL
SEE DRAWING

ALL DIMENSIONS ARE IN MILLIMETERS

DRAWING NAME
TAXI ASM CONN 64 MIC/P 100W

DRAWING NUMBER 15488666
SIZE A1x3 | SCALE 2:1 | FRAME NO Z | SHEET NO 1 OF 1 | STG R | REV 03 | N/P -

DWG TYPE
PART DRAWING

STYLE

VOLUME (CM³) | DISTR CODE D

UNLESS OTHERWISE SPECIFIED
THIS DOCUMENT IS IN ACCORDANCE WITH ASME Y14.5M 1994 UNLESS OTHERWISE SPECIFIED. DIMENSIONS ARE TO TOLERANCE MINIMUM MATERIAL. SEPARATE PATTERNS OF FEATURES MAY BE SHARED DEPARTMENTALLY REGARDLESS OF DATUM REFERENCE.

15488666

15488666

X-ON Electronics

Largest Supplier of Electrical and Electronic Components

Click to view similar products for Automotive Connectors ***category:***

Click to view products by APTIV ***manufacturer:***

Other Similar products are found below :

003-018-000 60993906-B M902-2131 M902-2161 M902-2344 72.330.1035.1 73.353.4028.0 F166900 F358300-B F407400 776880-1 827153-1 8N1515-32-24P 9-1326729-8 925474-1 928905-1 964562-4 968782-1 98891-1012 12004475-L 12020308 12041318-B 12052466 12064869 12015909 1-21030-1 12041254 12041318 12047946-B 12110546-B 12131792 12084688 12092346 HD34-18-14PT HD46-24-23SN-059 HDB36-24-16PN-059 HDP26-24-9SE-L015 12185280 12185550 12336-12 12191172-B 12S 13545280 13577943 13681974 13737722-B 13830674 13832576 13849772 13542772