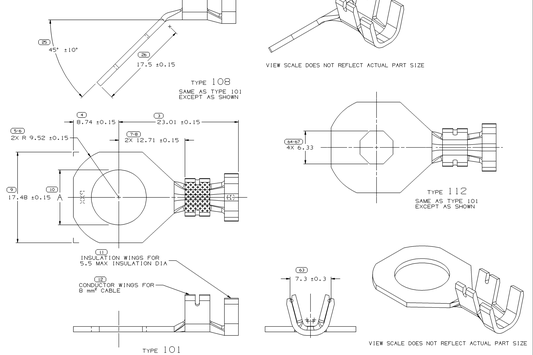

1541B039	R	01	-		1.024 X 31.75	P3614159 210 01LDING 3/4 HD SN PLTD	112	
1533612	R	A	-			12103502	108	8.5
12102965	R	B2	-		1.024 X 31.75	P3614159 210 01LDING 3/4 HD SN PLTD	101	6.7
12102502	R	B2	-		1.024 X 31.75	P3614159 210 01LDING 3/4 HD SN PLTD	101	8.5
12103501	R	B2	-		1.024 X 31.75	P3614159 210 01LDING 3/4 HD SN PLTD	101	10.6
PART NO	STD	REV	N/P	STATUS	MATL SIZE	MATL SPEC	TYPE	Aw.w
PLATED								

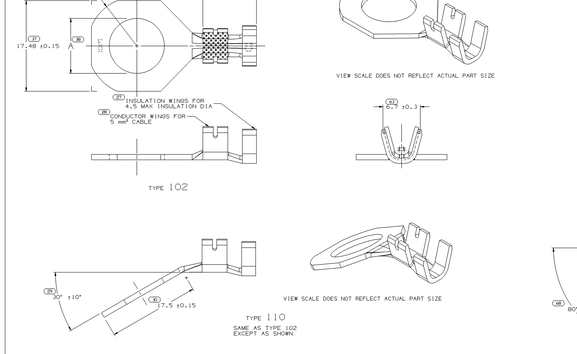

1549B652	R	01	AA			12103504	113	8.5
1536669	R	A	-			12103503	110	10.6
12102098	R	A	-		1.024 X 31.75	P3614159 210 01LDING 3/4 HD SN PLTD	102	6.7
12102504	R	B	-		1.024 X 31.75	P3614159 210 01LDING 3/4 HD SN PLTD	102	8.5
12103503	R	B	-		1.024 X 31.75	P3614159 210 01LDING 3/4 HD SN PLTD	102	10.6
PART NO	STD	REV	N/P	STATUS	MATL SIZE	MATL SPEC	TYPE	Aw.w
PLATED								

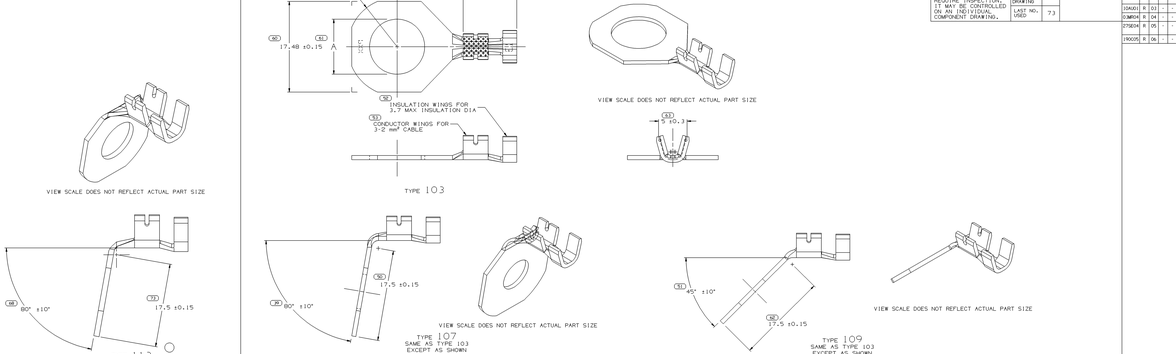

1533611	R	A	-			SAME AS 12102506 - BENT	109	8.5
12119881	R	A	-			SAME AS 12102099 - BENT	107	6.7
12102099	R	A	-		0.813 X 31.75	P3614134 210 01LDING 3/4 HD SN PLTD	103	6.7
12102506	R	B	-		0.813 X 31.75	P3614134 210 01LDING 3/4 HD SN PLTD	103	8.5
12102505	R	B	-		0.813 X 31.75	P3614134 210 01LDING 3/4 HD SN PLTD	103	10.6
PART NO	STD	REV	N/P	STATUS	MATL SIZE	MATL SPEC	TYPE	Aw.w
PLATED								

6.70 ±0.10	M6	1/4"
8.50 ±0.10	M8	5/16"
10.60 ±0.10	M10	3/8"
"A" DIA	METRIC STANDARD SCREW SIZE	

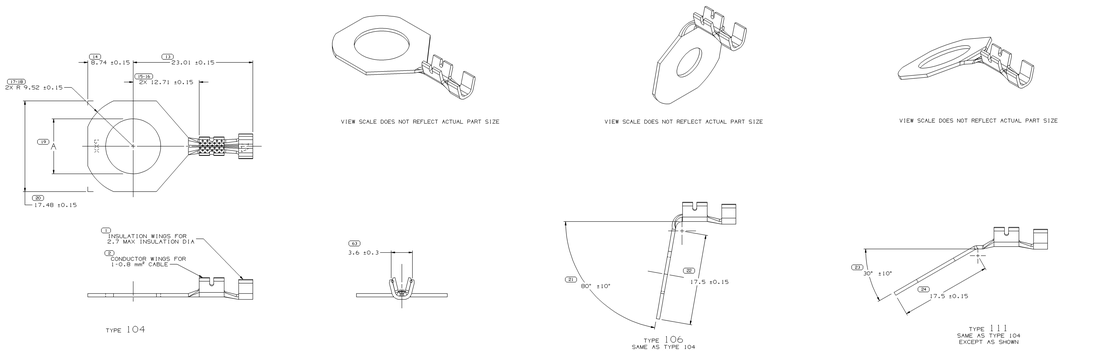

15950204	R	01				12103507	111	10.6
12102508	R	A	-		0.645 X 31.75	P3614468 210 01LDING 3/4 HD SN PLTD	104	6.7
12103512	R	A	-			12103508	104	8.5
12103508	R	B	-		0.645 X 31.75	P3614468 210 01LDING 3/4 HD SN PLTD	104	8.5
12103507	R	B	-		0.654 X 31.75	P3614468 210 01LDING 3/4 HD SN PLTD	104	10.6
PART NO	STD	REV	N/P	STATUS	MATL SIZE	MATL SPEC	TYPE	Aw.w
PLATED								

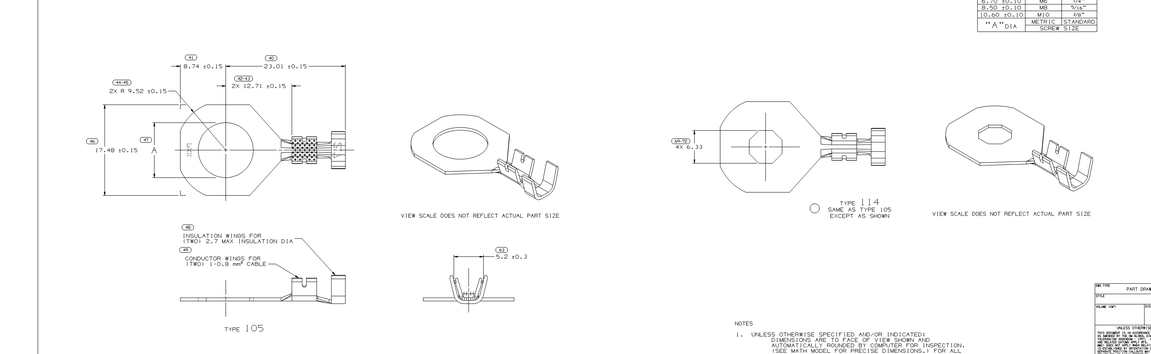

1549B534	R	01			0.645 X 31.75	P3614468 210 01LDING 3/4 HD SN PLTD		114
12103513	R	B	-		0.645 X 31.75	P3614468 210 01LDING 3/4 HD SN PLTD	6.2	105
12103510	R	A	-		0.645 X 31.75	P3614468 210 01LDING 3/4 HD SN PLTD	8.5	105
12103509	R	B	-		0.645 X 31.75	P3614468 210 01LDING 3/4 HD SN PLTD	10.6	105
PART NO	STD	REV	N/P	STATUS	MATL SIZE	MATL SPEC	Aw.w	TYPE
PLATED								

SYMBOL DEFINITION		MISSING NUMBERS
A DIMENSION WITHOUT AN INSPECTION REPORT IS A REFERENCE DIMENSION REQUIRING INSPECTION. IT MAY BE CONTROLLED ON AN INDIVIDUAL COMPONENT DRAWING.	TOTAL NO. OF SYMBOLS ON DRAWING: 61 LAST NO. USED: 73	

DWG STATUS					REVISION HISTORY	AUTH	DR	DP	DP
DATE	ISS	REL	RLT	CHG					
020FEB	R	01	-	-	CLEARED REV COLUMN & ISS/REQ'R RELEASED	RKK005	JMC	JMC	KE
14MY03	R	02	-	-	12102.001-02 - TYPE 101 WAS TYPE 104, & 12102965 - TYPE 101 WAS TYPE 106	DON403	JL.E	JL.E	DN
05AU01	R	03	-	-	1541B039 - RELEASED	212640	EES	JL.E	BNP
02MR04	R	04	-	-	1549B652 & 1549B674 - RELEASED	252298	EDV	JAM	MP
27SEP04	R	05	-	-	1549B652 -REVISED LOCATION OF SYM 17.5 ±0.15	291161	RDK	DDM	MLP
19OCT05	R	06	-	-	SHEET 1 OF 2 WAS SHEET 1 OF 6	272563	EES	EES	DN

NOTES

1. UNLESS OTHERWISE SPECIFIED AND/OR INDICATED: DIMENSIONS ARE TO FACE OF VIEW SHOWN AND AUTOMATICALLY ROUNDED BY COMPUTER FOR INSPECTION. (SEE MATH MODEL FOR PRECISE DIMENSIONS.) FOR ALL OTHER DIMENSIONS NOT SHOWN BUT REQUIRED FOR TOOL BUILD, SEE MATH MODEL FOR PRECISE TOOL PATH DATA.

DWG TYPE	PART DRAWING
STYLE	
VOLUME (CM³)	SCEN SIZE

UNLESS OTHERWISE SPECIFIED
THIS DOCUMENT IS AN ENGINEERING DATA ONLY AND DOES NOT REPRESENT A PRODUCT. THE PRODUCT DEFINITION DRAWING, ITEM, ALL REFERENCE DRAWINGS, SPECIFICATIONS, AND ALL OTHER DOCUMENTS MUST BE MET AND WILL BE CONSIDERED ESSENTIAL TO THE PRODUCT DEFINITION. THE DOCUMENT IS PROVIDED AS AN AID TO THE PRODUCT DEFINITION AND MAY BE HAND DRAWN.
ALL DIMENSIONS ARE IN MILLIMETERS

REFERENCE

PROCESS SENSITIVE DIMENSION	SUBSTRATES OF STAINING AND REVOLVED CONTOUR PER DELPHI SPECIFICATIONS
DIMENSION ENCLOSED IN A REVOLVED CONTOUR IS PERPENDICULAR TO THE CONTOUR SURFACE	NOTES: SEE CHART
GENERAL TOLERANCE PER DELPHI SPECIFICATIONS	DRAWING TYPE: TAXI TERM RING SPADE NONE
FINISH:	
DIMENSIONS UNLESS OTHERWISE SPECIFIED ARE FOR FINISHED PART	THIRD ANGLE PROJECTION
DRAWING NUMBER: 12103500	SCALE: 2:1
SIZE A1a4	SHEET 2 OF 2

DELPHI
DELPHI PACKARD ELECTRIC SYSTEMS
WARREN, OH

	DATE
DR	
APVD S. CLIMER	08JAN97
APVD D. FOWDO	08JAN97
APVD ROBERT LAIRD	21MAY97
APVD	
APVD	
SUBSTRATES OF STAINING AND REVOLVED CONTOUR PER DELPHI SPECIFICATIONS	
NOTES: SEE CHART	
DRAWING TYPE: TAXI TERM RING SPADE NONE	
DRAWING NUMBER: 12103500	
SIZE A1a4	SHEET 2 OF 2

IS 103200

X-ON Electronics

Largest Supplier of Electrical and Electronic Components

Click to view similar products for Automotive Connectors ***category:***

Click to view products by APTIV ***manufacturer:***

Other Similar products are found below :

003-018-000 60403001 60993906-B 629515004020001 M902-2131 M902-2161 72.330.1035.1 73.353.4028.0 F119300-B F166900 F258300-B F358300-B F407400 F444110 F487000 F509500B-B 827153-1 8N1515-32-24P 9-1326729-8 925474-1 928905-1 964562-4 968782-1 GT17SA-8DS-HU 98891-1012 98947-1016 12004475-L 12010290 12010309-B 12015454 12020219-B 12020308 12041318-B 12052225-L 12052466 12059125 12064869 12004327-B 12010503-B 12015308 12015384 12015909 1-21030-1 12041254 12041318 12047946-B 12047957 12047957-L 12059473 12066261