SYMBOL DEFINITION		MISSING SYMBOLS
A DIMENSION WITHOUT AN INSPECTION REPORT SYMBOL DOES NOT REQUIRE INSPECTION. IT MAY BE CONTROLLED ON THE INDIVIDUAL COMPONENT DRAWING.	TOTAL NO OF INSPECTIONS REQUIRED 144	NO MISSING SYMBOL NUMBER
	LAST NO. USED 59	

DWG STATUS					ZONE	REVISION HISTORY	AUTH	DR	APVD	APVD
DATE	STS	REV	N/P	CHG					1	2
25M104	R	01	-	-		RELEASED	255661	CCV	JAA	MGP
03AP06	R	01	AA	-		ADDED COVER 12015513 & 12033602 IN NOTE 5	278603	JAR	FXV	DDG
27AP07	R	01	AB	-		ADDED TPA 12015510 & 12015511 TO NOTE 5 AND IDENTIFIED DIM #2 AS THE PROCESS SENSITIVE DIMENSION	481154	BE	BE	DDG

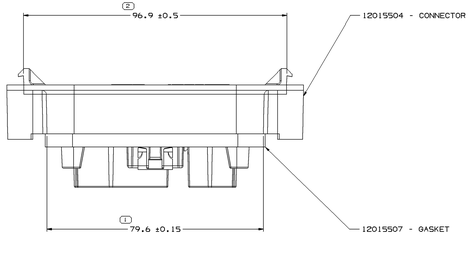

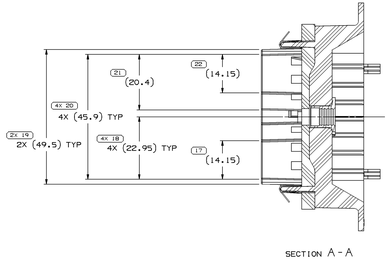

SECTION A-A

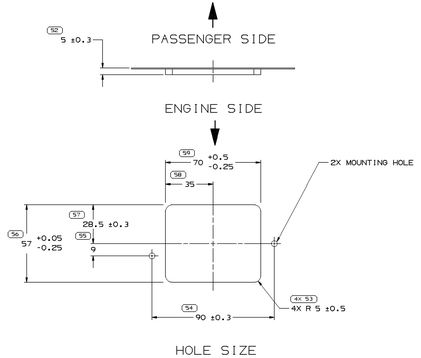

HOLE SIZE
VIEW FROM ENGINE COMPARTMENT
SCALE 1:1

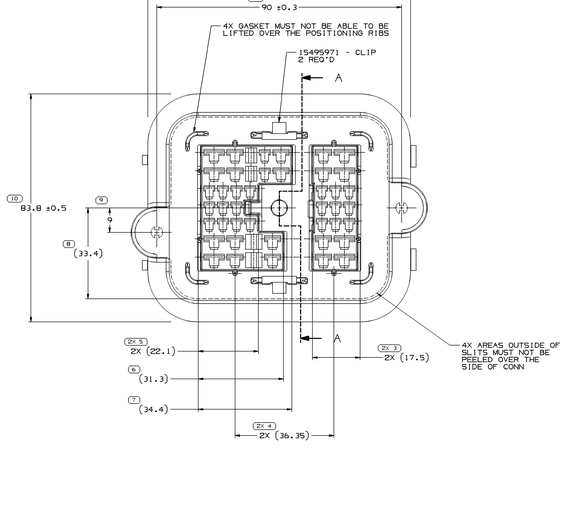

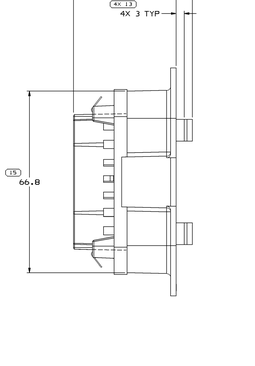

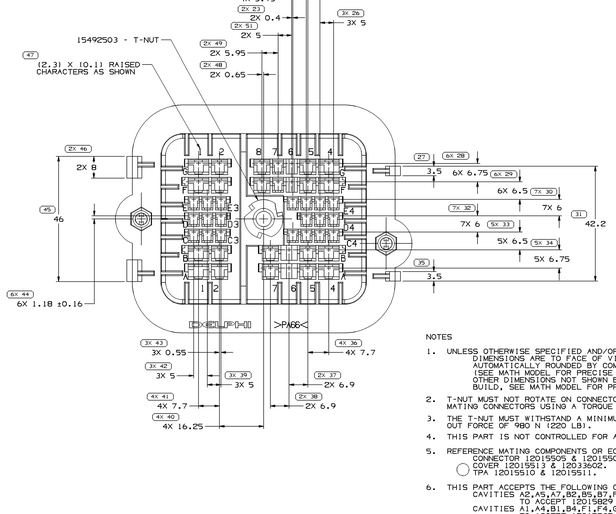

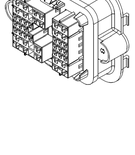

NOTES

1. UNLESS OTHERWISE SPECIFIED AND/OR INDICATED:
   DIMENSIONS ARE TO FACE OF VIEW SHOWN AND AUTOMATICALLY ROUNDED BY COMPUTER FOR INSPECTION (SEE MATH MODEL FOR PRECISE DIMENSIONS). FOR ALL OTHER DIMENSIONS NOT SHOWN BUT REQUIRED FOR TOOL BUILD, SEE MATH MODEL FOR PRECISE TOOL PATH DATA.
2. T-NUT MUST NOT ROTATE ON CONNECTOR BODY WHEN ASSEMBLED WITH MATING CONNECTORS USING A TORQUE OF 13.6 NM.
3. THE T-NUT MUST WITHSTAND A MINIMUM PUSH OUT FORCE OF 980 N (220 LBS).
4. THIS PART IS NOT CONTROLLED FOR AUTOMATIC FEEDING.
5. REFERENCE MATING COMPONENTS OR EQUIVALENT:
   CONNECTOR 12015505 & 12015506.
   COVER 12015513 & 12033602.
   TPA 12015510 & 12015511.
6. THIS PART ACCEPTS THE FOLLOWING COMPONENTS OR EQUIVALENT:
   CAVITIES A2,A5,A7,B2,B5,B7,F2,F5,F8,G2,G5 & G8
   TO ACCEPT 12015829 TERMINAL OR EQUIVALENT.
   CAVITIES A1,A4,B1,B4,F1,F4,G1 & G4
   TO ACCEPT 12015832 TERMINAL OR EQUIVALENT.
   ALL OTHER CAVITIES TO ACCEPT 12015823 TERMINAL OR EQUIVALENT.
7. SEALING CODE O - UNSEALED
8. DO NOT OVER TORQUE OR RETORQUE AFTER INITIAL TORQUE TO SPECIFIED VALUE BECAUSE CONNECTOR DAMAGE WILL OCCUR.

DRAWING NUMBER						
15492518						
SIZE	SCALE	SHEET NO	SHEETS	REV	SYM	
A1x3	2:1	2 OF 2	1 OF 1	R	01	AB

DWG TYPE	
PART DRAWING	
STYLE	
VOLUME (CM³)	SYSTEM USE

UNLESS OTHERWISE SPECIFIED
THIS DOCUMENT IS IN ACCORDANCE WITH ASME Y14.100 (PFM) AS MODIFIED BY THE GLOBAL DIMENSIONING AND TOLERANCING STANDARD (GDTS). ALL DIMENSIONS AND TOLERANCES ARE TO BE INTERPRETED AND APPLIED TO FEATURES AS DEFINED EXPLICITLY REGARDLESS OF SYSTEM REFERENCES.

ALL DIMENSIONS ARE IN MILLIMETERS

REFERENCE

2 PROCESS SENSITIVE DIMENSION

DIMENSIONS ENCLOSED IN ( ) INDICATE REFERENCE DIMENSIONS AND NO TOLERANCE LIMITS ARE ESTABLISHED

| DIMENSIONAL RANGE (MM) | | | | | |

X-ON Electronics

Largest Supplier of Electrical and Electronic Components

Click to view similar products for Automotive Connectors ***category:***

Click to view products by APTIV ***manufacturer:***

Other Similar products are found below :

003-018-000 60993906-B M902-2131 M902-2161 M902-2344 72.330.1035.1 73.353.4028.0 F166900 F358300-B F407400 776880-1 827153-1 8N1515-32-24P 9-1326729-8 925474-1 928905-1 964562-4 968782-1 98891-1012 12004475-L 12020308 12041318-B 12052466 12064869 12015909 1-21030-1 12041254 12041318 12047946-B 12110546-B 12131792 12084688 12092346 HD34-18-14PT HD46-24-23SN-059 HDB36-24-16PN-059 HDP26-24-9SE-L015 12185280 12185550 12336-12 12191172-B 12S 13545280 13577943 13681974 13737722-B 13830674 13832576 13849772 13542772