DRAWING NUMBER	H48022	REVISION	C	SHEET	1/1	APPROVAL LEVEL	-
DRAWING	-						

DELIVERY CONDITION: LEFT HAND VERSION SHOWN
RIGHT HAND VERSION SYMMETRICALLY OPPOSITE

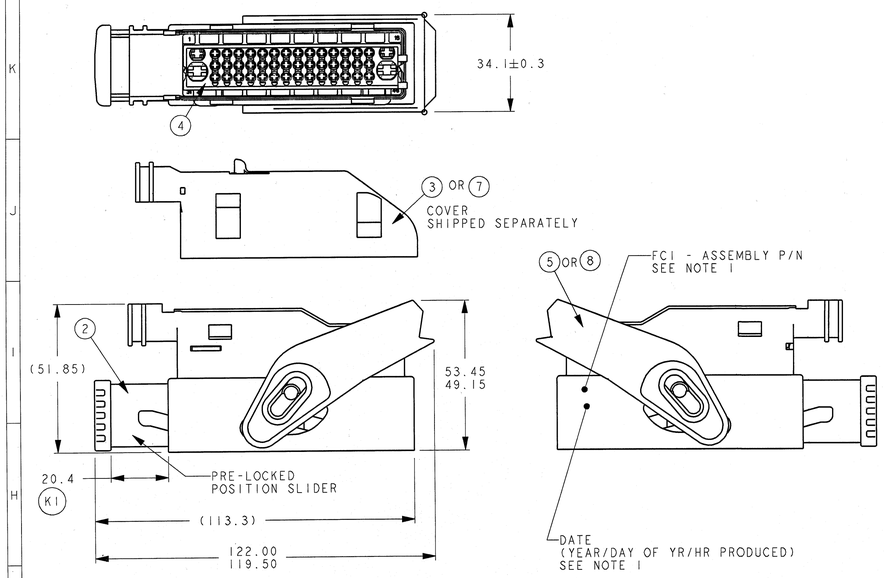

INSTALLATION OVERALL DIMENSIONS: CLOSED POSITION

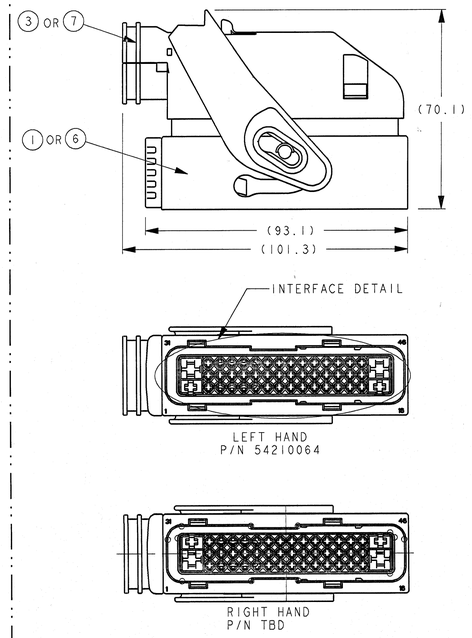

OPEN CONDITION: RIGHT HAND VERSION
COVER SHIPPED SEPARATELY
COVER SHOWN FOR VISUALIZATION ONLY
LEFT HAND VERSION SYMMETRICALLY OPPOSITE

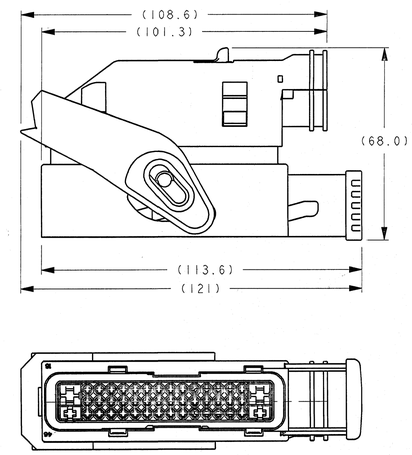

ASSEMBLY AT HIGHEST LOCATION DURING INSTALLATION

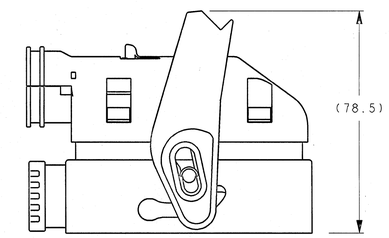

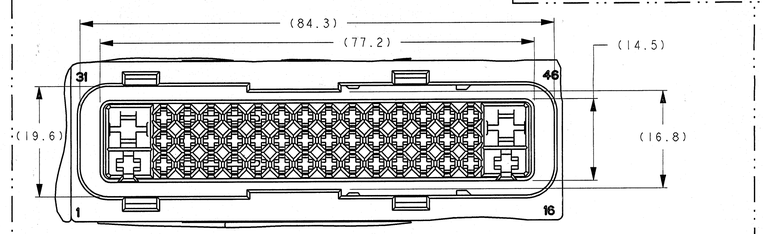

INTERFACE DETAIL
SCALE 2X

TERMINAL, SEAL AND WIRE SIZE CHART

BOX-TERMINAL 4.8 FEMALE 6 004 04 61	10	MATTE TIN	TXL	6 099 26 06	10	SILICONE / WHITE
BOX-TERMINAL 4.8 FEMALE 6 004 04 51	12		GXL/TXL	6 099 26 06	12	SILICONE / WHITE
BOX-TERMINAL 4.8 FEMALE 6 004 04 41	14-16		GXL/TXL	6 099 26 04	14	SILICONE / YELLOW
BOX-TERMINAL 4.8 FEMALE 6 004 04 31 6 004 04 32	18-20		GXL/TXL	6 099 26 04	18-20 GXL	SILICONE / GREEN
				6 099 26 07	18-20 TXL	
DCS-2 2.8 mm FEMALE 6 001 29 41 6 001 29 42	14-16		GXL/TXL	6 099 40 34	14-16 GXL	SILICONE / YELLOW
				6 099 40 23	14 TXL	
				6 099 40 23	16 TXL	
DCS-2 2.8 mm FEMALE 6 001 29 41 6 001 29 42	18-20		GXL/TXL	6 099 40 15	20 TXL	SILICONE / BROWN
				6 099 40 23	18-20 GXL	
				6 099 40 23	18 TXL	
DCS-2 2.8 mm FEMALE 6 001 29 11 6 001 29 12	22		GXL/TXL	6 099 40 15	22 GXL/TXL	SILICONE / BLUE
DCS-2 1.5 mm FEMALE 6 000 06 41	16	MATTE TIN	TXL	6 099 39 34	16-18	SILICONE / YELLOW
DCS-2 1.5 mm FEMALE 6 000 06 31	18-20		GXL	A-0110**	18-20	SILICONE/ BURNT ORANGE
DCS-2 1.5 mm FEMALE 6 000 06 31	18-20		TXL	6 099 39 28	20	SILICONE / GRAY
DCS-2 1.5 mm FEMALE 6 000 06 11	22-24		TXL	6 099 39 13	22	SILICONE / RED
CAVITY PLUG 1.5mm	N/A	N/A	N/A	6 099 39 06	N/A	SILICONE / WHITE
TERMINAL PART NUMBER DESCRIPTION	WIRE SIZE (AWG)	PLATING TYPE	INSULATION TYPE	SEAL PART NUMBER	WIRE SIZE (AWG)	MATERIAL/COLOR

** VENDOR - QSR (QUALITY SYNTHETIC RUBBER)

CONNECTOR CAVITY FLASHOVER CHART (K2)

PROGRAM	HOUSING PART NUMBER	ASSEMBLY * PART NUMBER	KEY	WIRE DRESS	CONTACT CAVITY FLASHOVER PATTERN ("X" SIGNIFIES FLASHED OVER CAVITY)	
46-WAY ABS (VENUS)	54210041	54210043	N/A	LH	31	X 2 X 3 X 4 X 5 36 37 38 39 X 40 41 42 43 X 44 X 45 46
	54210041A***	54210043A				X 7 X 8 X 9 20 21 22 X 23 24 X 25 X 26 27 28 X 29 X 30
					1	X 2 X 3 X 4 X 5 X 6 X 7 X 8 X 9 X 10 11 12 13 X 14 X 15 16
	54210042	54210044	N/A	LH	31	X 2 X 3 34 35 X 36 X 37 38 39 X 40 41 42 43 44 X 45 46
	54210042A***	54210044A				X 7 X 8 19 20 X 21 X 22 23 24 X 25 X 26 27 28 29 X 30
					1	X 2 X 3 X 4 5 X 6 7 X 8 X 9 X 10 11 12 13 X 14 X 15 16

CAVITY VIEW PERSPECTIVE LOOKING AT BOTTOM OF CONNECTOR
*CONTACT FCI FOR DELIVERY LEAD TIME
***PART MATERIAL >PA66-GF35<

NOTES:

1) FCI CONNECTOR ASSEMBLY PART NUMBER (LAST 4 OR 5 DIGITS) DATE (YR/DAY OF YR/HR PRODUCED) LASER MARKING THIS LOCATION.

2) (K) INDICATES IN-PROCESS INSPECTION FOR MANUFACTURERING. DIMENSIONS(S) OR SPECIFICATIONS(S) REQUIRED (3).

3) (NOTE REMOVED)

[4] COMPONENTS MOLDED PRIOR TO 3/2/04 HAVE NO P/N MARKING, WERE MARKED WITH >SPS-GF30< DESIGNATION.

[5] OPTIONAL MATERIAL PRIOR TO 3/2/04. QUESTRA N WA 7030, COLOR GRAY

[6] COMPONENTS MOLDED PRIOR TO 3/2/04 WERE MARKED WITH >SPS-GF20< DESIGNATION

[7] COMPONENTS MOLDED PRIOR TO 3/2/04 WERE MARKED WITH P/N 54210047 AND 2003 CALENDAR YEAR DESIGNATION.

8) (1) QUALITY ASSURANCE REQUIREMENTS SPC DATA - SEALING COMPRESSION GAP MEASUREMENT 0-0.45mm USING GAUGE TL-346-J WHERE 0 - REPRESENTS AIR GAP OF 1.85mm AND 0.45mm AIR GAP OF 1.40mm MEASURE IN MIDDLE OF SEAL AREA

9) MATES WITH P/N'S 54430013, 54430012 & 54430011

10) FOR ALL COMPONENT PART NUMBERS ENDING IN "A" (ALL COMPONENT PARTS MADE FROM PA66-GF35) THE MOLDED IN PART NUMBER MAY APPEAR WITHOUT THE LETTER "A", HOWEVER, THE MOLDED IN MATERIAL CODE MUST BE ">PA66-GF35<".

UNCONTROLLED

FCI AUTOMOTIVE MAR - 3 2006

MASTER COPY WHEN IN RED

ASSEMBLY COMPONENTS

ASSEMBLY PART NUMBER 54210064	54210064A	REQUIRED	ITEM	PART NUMBER	DESCRIPTION	MATERIAL	COLOR	
X			1	54210053	FEMALE HOUSING - LH	>SPS-GF20<	BLACK	6 7
X	X		2	54210065	SLIDER	>POM-GF25<	WHITE (NATURAL)	
X	X		3	54210045	WIRE DRESS COVER	>SPS-GF30<	BLACK	
X	X		4	54210014	CABLE SEAL RETAINER - LH	>PA66-GF15<	NATURAL	4 5
X	X		5	54210046	LEVER	>SPS-GF30<	GRAY	
	X		6	54210053A	FEMALE HOUSING - LH	>PA66-GF35<	BLACK	
	X		7	54210045A	WIRE DRESS COVER	>PA66-GF35<	BLACK	
	X		8	54210046A	LEVER	>PA66-GF35<	GRAY	

PART PRESENCE INSPECTION (K3)

SEE CHART					
PART NUMBER F.C.I.	DESCRIPTION	PART NUMBER	REV DATE	RLV	DRAWING NUMBER
		CUSTOMER			

REV	DATE	ECN	ZONE	CHANGE DESCRIPTION	DRAWN BY	CHK. BY	APPR. BY
8388	02/28/06	C	K10, J13	ADDED ITEM SUBSELECTS TO CORRESPOND WITH ITEM OPTIONS	LDW	ALM	ALM
8164	11/28/05	B	A16	UPDATED PART NUMBERS TO INCLUDE ALTERNATE MATERIALS	LDW	ALM	ALM
8164	11/28/05	B	C9	UPDATED PART NUMBERS TO REFLECT ALTERNATE MATERIAL	LDW	ALM	ALM
6871	06/21/04	A	-	PRODUCTION RELEASE	DEH	TK	TK

PRODUCT SPEC.	PACKAGING SPEC.	APPLICATION SPEC.
-	-	-

THIS DRAWING AND ALL OTHER INFORMATION CONTAINED THEREIN IS PROPRIETARY AND THE PROPERTY OF FCI. This drawing may not be copied, reproduced or disclosed to any third party without the expressed written permission of FCI. © FCI April 1999

TOLERANCES: 1 PLACE ±0.25; 2 PLACE ±0.13; ANGULAR ±2°
COUNTERPART NO. -
MATERIAL: SEE CHART
COLOR: -
SURFACE FINISH -
DO NOT SCALE DRAWING
TOOL NO. A-128A
ECO Loc. Code NA
3RD ANGLE
CAD SYSTEM pro / eng.
DWG SIZE A1
DIMENSION IN MILLIMETERS

	DATE	NAME
DRAWN BY	07/28/03	D.HENDRIAN
CHECKED BY	-	-
APPROVED BY	-	-

TITLE: 46-WAY VENUS CONNECTOR ASSEMBLY
DRAWING NUMBER: H48022
SHEET 1 of 1
USR NO. - CAT. NO. -
FILE NAME H48022
SCALE 1:1

2/24/06

F4D4

X-ON Electronics

Largest Supplier of Electrical and Electronic Components

Click to view similar products for Automotive Connectors ***category:***

Click to view products by APTIV ***manufacturer:***

Other Similar products are found below :

003-018-000 60403001 60993906-B 629515004020001 M902-2131 M902-2161 72.330.1035.1 73.353.4028.0 F119300-B F166900 F258300-B F358300-B F407400 F444110 F487000 F509500B-B 827153-1 8N1515-32-24P 9-1326729-8 925474-1 928905-1 964562-4 968782-1 GT17SA-8DS-HU 98891-1012 98947-1016 12004475-L 12010290 12010309-B 12015454 12020219-B 12020308 12041318-B 12052225-L 12052466 12059125 12064869 12004327-B 12010503-B 12015308 12015384 12015909 1-21030-1 12041254 12041318 12047946-B 12047957 12047957-L 12059473 12066261