NOTA	SPECIFICATIONS
1	CONNECTEUR DOIT ETRE CONFORME AU CDC :96 238 404 99 *FEMALE CONNECTOR ACCORDING TO SPECIFICATION PSA :96 238 404 99*
2	CONNECTEUR SUIVANT: *FEMALE CONNECTOR ACCORDING TO* -CLASSE DE TEMPERATURE T3 SELON B217050 REV A *TEMPERATURE CLASS T3 ACCORDING TO B217050 REV A* -CLASSE DE VIBRATION MOTEUR SELON B217050 REV A *ENGINE VIBRATOR CLASS ACCORDING TO B217050 REV A* -CLASSE ETANCHEITE 2 SELON B217050 REV A *SEALING CLASS 2 ACCORDING TO B217050 REV A*
3	PRECONISATION D'UTILISATION /*USER MANUAL* REF FCI: PU 071/*FCI'S REFERENCE: PU 071* REF PSA:96 556 834 99/*PSA'S REFERENCE:96 556 834 99*
4	ALVEOLE SUIVANT STE: 96 288 230 99 *CAVITY ACCORDING TO: STE: 96 288 230 99*
5	CONNECTEUR ET POSITION ALVEOLE CONFORMES AU PLAN D'INTERFACE 211FT0523 ET STE 96 339 622 99 *FEMALE CONNECTOR AND CAVITY'S POSITION ACCORDING TO: DRAWING INTERFACE 211FT0523 ET STE 96 339 622 99*
6	CONDUCTEUR SUIVANT STE :96 418 794 99 *WIRE ACCORDING TO: STE :96 418 794 99*
7	CONDITIONNEMENT SUIVANT NORME: E73 03 150G *PACKAGING ACCORDING TO STANDARD: E73 03 150G*
8	DIAMETRE DE L'ISOLANT DES FILS *WIRE INSULATION DIAMETER* :MINI=1.40 :MAXI=2.80
9	MASSE DU PRODUIT LIVRABLE :5g *DELIVERY CONNECTOR WEIGHT : 5g*
10	CHARNIERE DE PLAQUETTE ARRIERE ABSENTE OU CASSEE ADMISE *NO WAFER HINGE OR WAFER HINGE BROKEN ALLOWED*
11	DEFAUTS D'ASPECT SUR ZONES NON FONCTIONNELLES ADMIS *VISUAL DEFECTS ON NO FUNCTIONNAL AREAS ALLOWED*

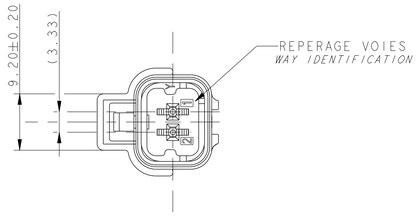

COUPE C-C

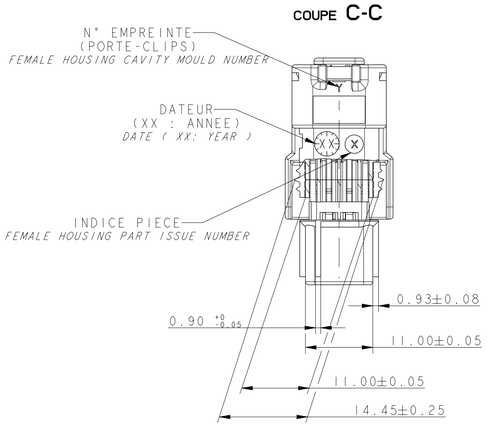

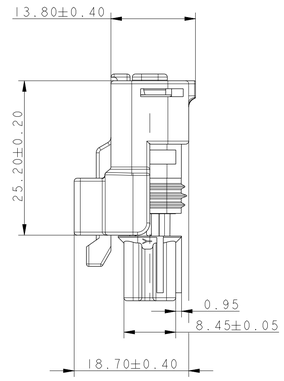

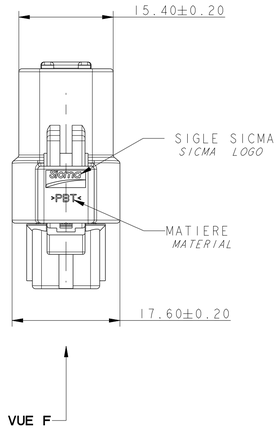

COUPE B-B

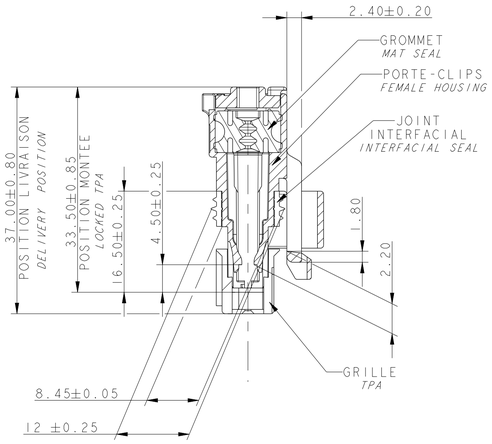

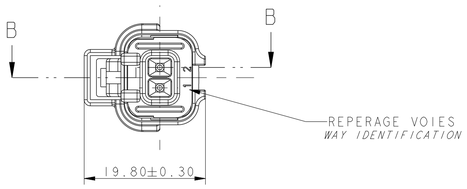

PORTE-CLIPS *FEMALE HOUSING*	211 1 0 073	PBT NON CHARGE *PBT: 0% GF*	NOIR *BLACK*
GRILLE *TPA*	211 M 0 100	PBT: 15% FV *PBT: 15% GF*	NOIR *BLACK*
	211 M 1 100		MARRON *BRUN*
	211 M 2 100		ROUGE *RED*
	211 M 3 100		ORANGE *ORANGE*
	211 M 4 100		JAUNE *YELLOW*
	211 M 5 100		VERT *GREEN*
	211 M 6 100		BLEU *BLUE*
	211 M 8 100		GRIS *GREY*
	211 M 9 100		BLANC *WHITE*
GROMMET *MAT SEAL*	211 M 108	SILICONE 30Sh AUTOLUBRIFIE	VERT *GREEN*
JOINT INTERFACIAL *INTERFACIAL SEAL*	211 M 075	SILICONE 30Sh 4% D'HUILE	BLEU *BLUE*
DESIGNATION *DESCRIPTION*	**REF. MVL** *MVL'S REFERENCE*	**MATIERE** *MATERIAL*	**COULEUR** *COLOUR*

ECHELLE 1:1
SCALE 1:1

CODAGE NOIR REPRESENTE
BLACK CODING DRAW

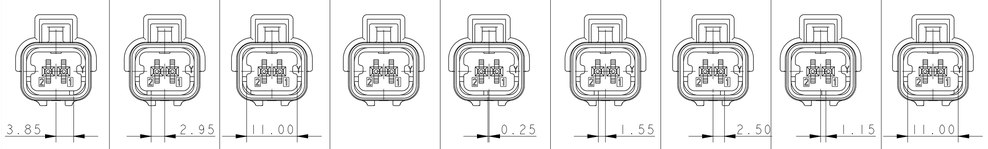

VUE F
VIEW F

Tolérances : ±0.05

NOIR /*BLACK*	MARRON /*BROWN*	ROUGE /*RED*	ORANGE /*ORANGE*	JAUNE/ *YELLOW*	VERT/ *GREEN*	BLEU /*BLUE*	GRIS /*GREY*	BLANC /*WHITE*	COULEUR *COLOUR*	
211 PC 02 2S 0 149	211 PC 02 2S 1 149	211 PC 02 2S 2 149	211 PC 02 2S 3 149	211 PC 02 2S 4 149	211 PC 02 2S 5 149	211 PC 02 2S 6 149	211 PC 02 2S 8 149	211 PC 02 2S 9 149	PART NUMBER	MVL
A	A	A	A	A	A	A	A	A	PART REVISION	MVL
10820158	10820159	10820160	10820161	10820162	10820163	10820164	10820165	10820166	PART NUMBER	DELPHI
01	01	01	01	01	01	01	01	01	PART REVISION	DELPHI

OLD REVISIONS ANCIENNES REVISIONS		
A 06 039	-	-
	-	-
	-	-
	-	-
	-	CREATION
	-	-
	-	-
-	-	-
	-	-
	-	-
-	-	DELPHI P/N ADDED

ECN NO. *NUMERO ECN*	POSITION *POSITION*	CHANGE DESCRIPTION *MODIFICATION*

PRODUCT SPEC. *SPECIF. PRODUIT* -
PACKAGING SPEC. *SPECIF. EMBALAGE* -
APPLICATION SPEC. *SPECIF. APPLICATION* -

COPYRIGHT DELPHI CORPORATION AND/OR ITS AFFILIATES. ALL RIGHTS RESERVED. REVISED
THIS DRAWING IS THE PROPERTY OF DELPHI CORPORATION AND CONTAINS DELPHI CONFIDENTIAL INFORMATION. THE REPRODUCTION, DISTRIBUTION AND UTILIZATION OF THIS DOCUMENT OR ITS RELATED CAD MATH DATA, AS WELL AS COMMUNICATION OF ANY CONTENT TO OTHERS, WITHOUT EXPRESS AUTHORIZATION, IS PROHIBITED.
CE PLAN EST LA PROPRIETE DE DELPHI CORPORATION ET CONTIENT DES INFORMATIONS DELPHI CONFIDENTIELLES. LA REPRODUCTION, LA DISTRIBUTION ET L'UTILISATION DE CE DOCUMENT OU DE SES DONNEES MATHEMATIQUES CAD, AINSI QUE LA COMMUNICATION DE TOUT CONTENU A AUTRUI, SANS AUTORISATION EXPRESSE, EST INTERDITE.

TOLERANCES *TOLERANCES* ±0.1 ±2°
CONTENANT N° *CONTE YNRIE N°* SEE TABLE
DO NOT MEASURE DRAWING *NE PAS PRENDRE DE COTES*
MATERIAL : *MATIERE :* SEE TABLE
COLOUR : *COULEUR :* SEE TABLE
TOOL NO. *OUTIL N°* -
SURFACE FINISH *ETAT DE SURFACE* -
ECO Loc. Code *CODE B.E.* FE

DELPHI PACKARD ELECTRICAL/ELECTRONIC ARCHITECTURE
EPERNON, FRANCE
ISO PROJECTION *PROJECTION ISO*
DIMENSION IN MILLIMETERS *DIMENSIONS EN MILLIMETRES*
CAD SYSTEM pro / eng.
DWG SIZE *FORMAT* A1

	DATE *DATE*	NAME *NOM*
CREATED BY *CREE PAR*	2006-09-19	JEANDET
MODIFIED BY *MODIF. PAR*	2013/03/19	F FAURIE
CHECKED BY *VERIF. PAR*	2013/03/20	Pascal MENARD
APPROVED BY *APPR. PAR*	2013/03/21	F LAVERTU

FILE NAME *NOM DE FICHIER* 211FT0525

TITLE *DESIGNATION* **2-WAY 15x0.8 FEMALE CONNECTOR**
PROJECT *PROJET* **MINI SEALED "NM" FAMILY**
ESR NO. *NUMERO ESR* FRA-0102
CAT. NO. *NUMERO CAT.* 211PC022SX149
DOCUMENT UNDER PDS CONTROL *DOCUMENT SOUS P.D.S.*
NO MODIFICATION ALLOWED OUTSIDE *PAS DE MODIFICATION EN DEHORS*

DRAWING NUMBER *REF. PLAN* **211FT0525**
REV. *IND.* **B**
STATE *ETAT* **SERIAL RELEASED**
PART NUMBER *REF. ARTICLE* **See Table**
REV. *IND.* -
APPROVAL LEVEL *NIV. D'APPROBATION* -
SHEET *FEUILLE* 1 of 1 sur 1
SCALE *ECH.* 1:1

EUR C04 112 F29

X-ON Electronics

Largest Supplier of Electrical and Electronic Components

Click to view similar products for Automotive Connectors ***category:***

Click to view products by APTIV ***manufacturer:***

Other Similar products are found below :

003-018-000 60403001 60993906-B 629515004020001 M902-2131 M902-2161 72.330.1035.1 73.353.4028.0 F119300-B F166900 F258300-B F358300-B F407400 F444110 F487000 F509500B-B 827153-1 8N1515-32-24P 9-1326729-8 925474-1 928905-1 964562-4 968782-1 GT17SA-8DS-HU 98891-1012 98947-1016 12004475-L 12010290 12010309-B 12015454 12020219-B 12020308 12041318-B 12052225-L 12052466 12059125 12064869 12004327-B 12010503-B 12015308 12015384 12015909 1-21030-1 12041254 12041318 12047946-B 12047957 12047957-L 12059473 12066261