NOTA	SPECIFICATIONS
1	LE CONNECTEUR DOIT ETRE CONFORME AU CDC: 96 238 404 99 *FEMALE CONNECTOR ACCORDING TO SPECIFICATION PSA :* *96 238 404 99*
2	CAHIER DE MISE EN OEUVRE CONNECTIQUE *USER'S MANUAL*: REF DELPHI : PU 071 / *DELPHI REFERENCE: PU071* REF PSA : 96 326 975 99 / *PSA'S REFERENCE: 96 556 975 99*
3	CONFORME AU PLAN D'ALVEOLE: STE 96 288 230 99 *CAVITY ACCORDING TO: STE 96 288 230 99*
4	CONNECTEUR ET POSITION ALVEOLE CONFORMES AU PLAN D'INTERFACE: *FEMALE CONNECTOR AND CAVITY'S POSITION ACCORDING INTERFACE DRAWING:* STE 96 339 622 99
5	CONDUCTEUR ELECTRIQUE SUIVANT / *ELECTRICAL WIRE ACCORDING TO*: B25 1110 Rev A
6	CONDITIONNEMENT SUIVANT NORME E 7303 150 G *PACKAGING ACCORDING TO STANDARD: E 7303 150 G*
7	DIAMETRE DE FILS / *WIRE INSULATION DIAMETER :* MINI=1.40 MAXI=2.80
8	MASSE DU PRODUIT LIVRABLE = 8g *DELIVERY CONNECTOR WEIGTH : 8g*
9	CLASSE DE TEMPERATURE T3 SELON B217050 REV A *TEMPERATURE CLASS T3 ACCORDING TO B21 7050 REV A* CLASSE DE VIBRATION V2 (CONNECTEUR SUR MOTEUR) SELON B217050 REV A *VIBRATIONS CLASS V2 (CONNECTOR ON ENGINE) ACCORDING TO B21 7050 REV A* CLASSE ETANCHEITE 2 SELON B217050 REV A *SEALING CLASS 2 ACCORDING TO B21 7050 REV A*
10	CHARNIERE DE PLAQUETTE ARRIERE ABSENTE OU CASSEE ADMISE *NO REAR PLATE HINGE OR REAR PLATE HINGE BROKEN ALLOWED*

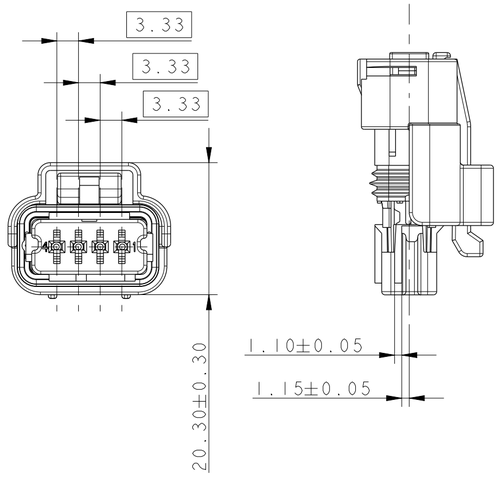

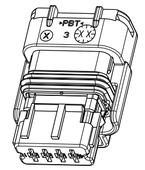

ECHELLE 1:1

CODAGE GRIS REPRESENTE
GREY CODING DRAW

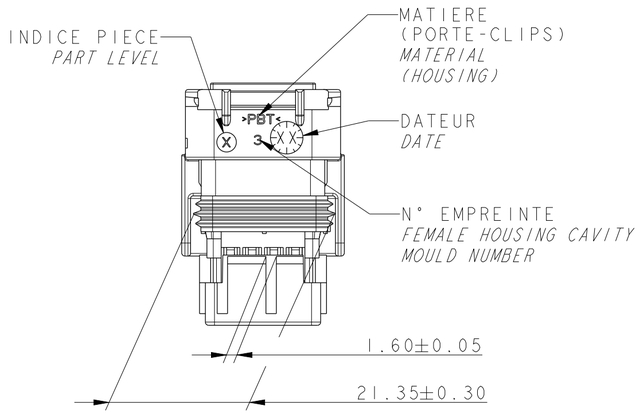

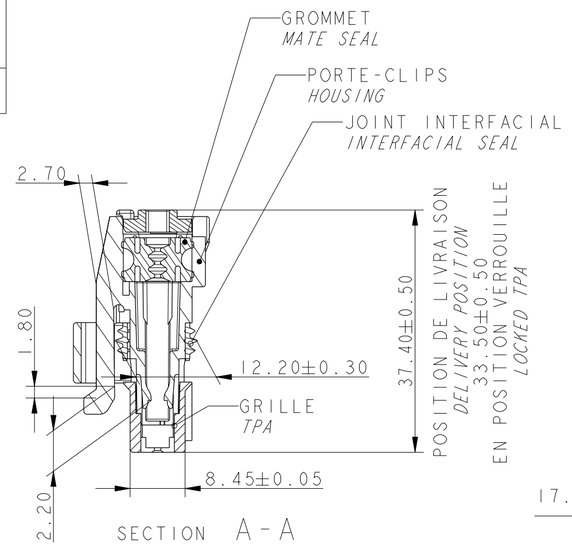

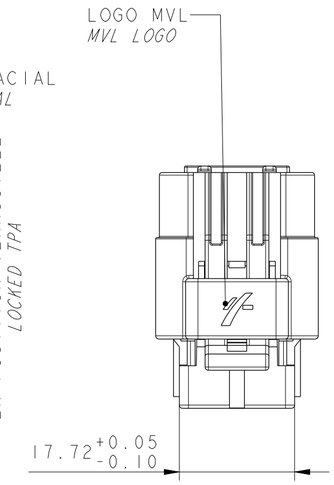

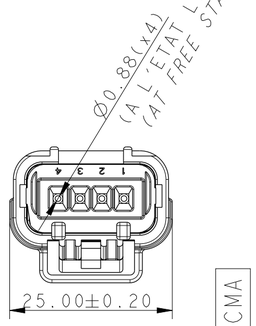

ISOLANT / *HOUSING*	211 1 0 022	PBT 0% FV / *PBT 0% GF*	NOIR / *BLACK*
GRILLE *TPA*	211 M 8 052	PBT 15% FV *PBT 15% GF*	GRIS / *GREY*
	211 M 6 052		BLEU / *BLUE*
	211 M 4 052		JAUNE / *YELLOW*
JOINT INTERFACIAL *INTERFACIAL SEAL*	211 M 6 116	SILICONE	BLEU / *BLUE*
GROMMET *MATE SEAL*	211 M 134	SILICONE 4% D'HUILE / *4% OF OIL* DURETE / *HARDNESS*: 20±5 SHORE A	VERT / *GREEN*
DESIGNATION	REF.MVL / *MVL REF.*	MATIERE / *MATERIAL*	COULEUR / *COLOR*
3.00 — 4.50	5.50 — 2.00	0.50 — 7.00	VUE DE DESSOUS *BOTTOM VIEW* ±0.05
codage:NOIR couleur grille: JAUNE *Coding: BLACK TPA color: YELLOW*	codage:BLEU couleur grille: BLEU *Coding: BLUE TPA color: BLUE*	codage:GRIS couleur grille: GRIS *Coding: GREY TPA color: GREY*	CODAGE COULEUR *CODING COLOR*
211 PC 04 2 S 4 021	211 PC 04 2 S 6 021	211 PC 04 2 S 8 021	MVL REF
C	C	C	PART LEVEL
10763691	10811785	10763659	REF DELPHI
01	01	01	REVISION

CONNECTIQUE SICMA

ECN-NO. *NUMERO ECN*	POSITION *POSITION*	CHANGE DESCRIPTION *MODIFICATION*
-	-	-
	-	-
	-	-
	-	-
	-	DELPHI P/N ADDED

PRODUCT SPEC. *SPECIF. PRODUIT* -
PACKAGING SPEC. *SPECIF. EMBALLAGE* -
APPLICATION SPEC. *SPECIF. APPLICATION* -

COPYRIGHT DELPHI CORPORATION AND/OR ITS AFFILIATES. ALL RIGHTS RESERVED. REVISED
THIS DRAWING IS THE PROPERTY OF DELPHI CORPORATION AND CONTAINS DELPHI CONFIDENTIAL INFORMATION. THE REPRODUCTION, DISTRIBUTION AND UTILIZATION OF THIS DOCUMENT OR ITS RELATED CAD MATH DATA, AS WELL AS COMMUNICATION OF ANY CONTENT TO OTHERS, WITHOUT EXPRESS AUTHORIZATION, IS PROHIBITED.
CE PLAN EST LA PROPRIETE DE DELPHI CORPORATION ET CONTIENT DES INFORMATIONS DELPHI CONFIDENTIELLES. LA REPRODUCTION, LA DISTRIBUTION ET L'UTILISATION DE CE DOCUMENT OU DE SES DONNEES MATHEMATIQUES CAD, AINSI QUE LA COMMUNICATION DE TOUT CONTENU A AUTRUI, SANS AUTORISATION EXPRESSE, EST INTERDITE.

TOLERANCES *TOLERANCES* ±0.1 ±2° -
COUNTERPART Nr. *CONTRE-PARTIE N°* -
MATERIAL : *MATIERE :* SEE TABLE -
COLOUR : *COULEUR :* SEE TABLE
SURFACE FINISH *ETAT DE SURFACE* -

DELPHI
DELPHI PACKARD ELECTRICAL/ELECTRONIC ARCHITECTURE
EPERNON, FRANCE

CAD SYSTEM: pro / eng.
DIMENSION IN MILLIMETERS *DIMENSIONS EN MILLIMETRES*
ISO PROJECTION *PROJECTION ISO*
DWG SIZE *FORMAT*: A2

DO NOT MEASURE DRAWING *NE PAS PRENDRE DE COTES*
TOOL NO. *OUTIL N°* -
ECO Loc. Code *CODE B.E.* FE

	DATE *DATE*	NAME *NOM*
CREATED BY *CREE PAR*	2003-02-03	J.PINEL
MODIFIED BY *MODIF. PAR*	2013/10/10	F FAURIE
CHECKED BY *VERIF. PAR*	2013/10/15	S LACOTE
APPROVED BY *APPR. PAR*	2013/10/15	Pascal MENARD

TITLE *DESIGNATION*: **4-WAY 1.5x0.8 FEMALE CONNECTOR**
PROJECT *PROJET*: **MINI SEALED "NMM" 4-WAY FEMALE CONNECTOR (ANONYME)**
ESR NO. *NUMERO ESR* FRA-0623
CAT. NO. *NUMERO CAT.* 211PC042SX021
DOCUMENT UNDER PDS CONTROL *DOCUMENT GERE SOUS P.D.S.*
NO MODIFICATION ALLOWED OUTSIDE *PAS DE MODIFICATION EN DEHORS*
FILE NAME *NOM DE FICHIER* 211FT0194

DRAWING NUMBER *REF. PLAN*: **211FT0194**
REV. *IND.*: **D**
STATE *ETAT*: **SERIAL RELEASED**
PART NUMBER *REF. ARTICLE*: **See Table**
REV. *IND.*: -
APPROVAL LEVEL *NIV. D'APPROBATION*: -
SHEET *FEUILLE*: 1 of 1 sur 1
SCALE *ECH.*: 1:1

EUR C04 112 F29 PDS

X-ON Electronics

Largest Supplier of Electrical and Electronic Components

Click to view similar products for Automotive Connectors ***category:***

Click to view products by APTIV ***manufacturer:***

Other Similar products are found below :

003-018-000 60403001 60993906-B 629515004020001 M902-2131 M902-2161 72.330.1035.1 73.353.4028.0 F119300-B F166900 F258300-B F358300-B F407400 F444110 F487000 F509500B-B 827153-1 8N1515-32-24P 9-1326729-8 925474-1 928905-1 964562-4 968782-1 GT17SA-8DS-HU 98891-1012 98947-1016 12004475-L 12010290 12010309-B 12015454 12020219-B 12020308 12041318-B 12052225-L 12052466 12059125 12064869 12004327-B 12010503-B 12015308 12015384 12015909 1-21030-1 12041254 12041318 12047946-B 12047957 12047957-L 12059473 12066261