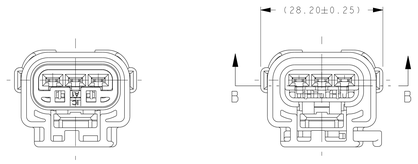

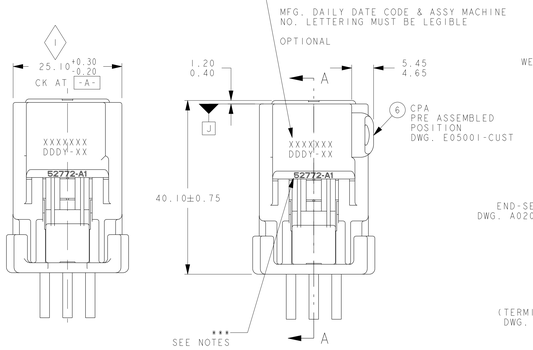

WITHOUT CPA

SEE P/N CHART
ALL DIMENSIONS SAME
AS WITH CPA VIEWS

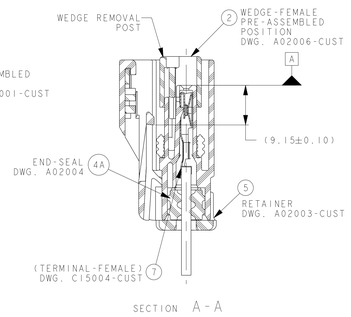

SECTION A-A

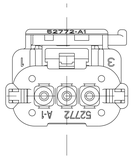

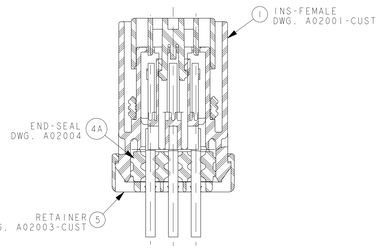

SEALED ASSEMBLY VIEWS
SEE P/N CHART
SHOWN WITH CPA'S

SECTION B-B

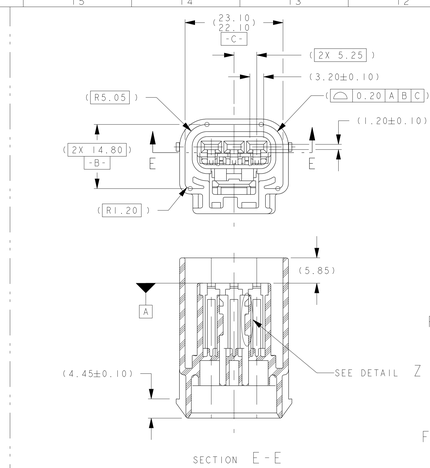

SECTION E-E

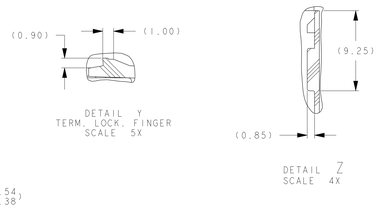

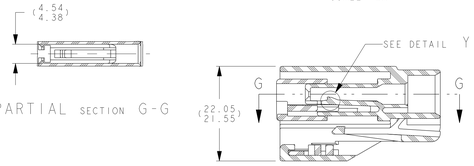

FOR REFERENCE ONLY
INSULATOR VIEWS

CAVITY DETAIL VIEW
SECTION F-F

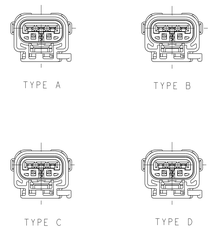

POLARIZATION OPTIONS
FULL SIZE SHOWN
WITH CPA

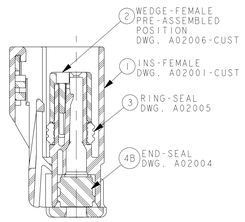

SECTION A-A
(FCI P/N 54200335)
SEALED PLUG

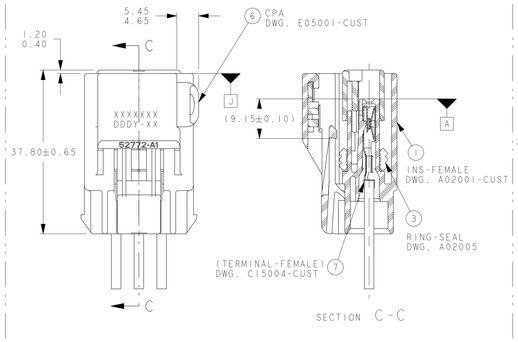

SECTION C-C

SEALED ASSEMBLY VIEWS
SHIPPED WITHOUT END SEAL AND RETAINER
P/N TO BE ASSIGNED

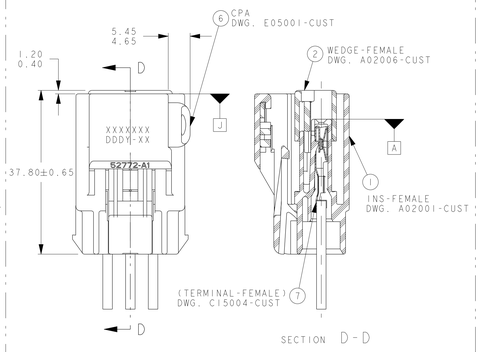

SECTION D-D

UNSEALED ASSEMBLY VIEWS
SHIPPED WITHOUT END SEAL AND RETAINER
SEE P/N CHART

NOTES:

QUALITY ASSURANCE REQUIREMENTS PER CHRYSLER PS-7300: 1
SPC DATA REQUIRED

ENGINEERING APPROVAL OF SUPPLIER SAMPLES IS REQUIRED PRIOR TO AUTHORIZATION OF PART PRODUCTION

CHANGES IN DESIGN COMPOSITION OR PROCESSING FROM THE PART PREVIOUSLY APPROVED FOR PART PRODUCTION REQUIRES PRIOR ENGINEERING APPROVAL

WIRING FABRICATORS MUST PURCHASE FROM SOURCES SHOWN

ALL THE SEALED CONNECTOR APPLICATIONS MUST BE USED WITH CHRYSLER WIRE SPEC. MS-8288 OR MS-9502 THIN WALL X-LINK 20,18, 16 & 14 GAGE WIRES ONLY UNLESS OTHERWISE SPECIFIED (WIRE INSULATIONS Ø1.70 MIN TO Ø2.70 MAX)

ALL NON-SEALED APPLICATIONS MAY BE USED WITH ANY WIRE INSULATION 22 GAGE THRU 10 GAGE (EXCEPT AS NOTED) PROVIDING THAT A TERMINAL GRIP FOR THAT CORE/INSULATION COMBINATION IS SHOWN ON THE FEMALE TERMINAL DRAWING

NOTE: MAX. INSULATION CRIMP WIDTH = 4.50
MAX. INSULATION CRIMP HEIGHT = 4.50
MAX. INSULATION DIA. = 4.09 (10 GA THIN WALL)

USE WITH CAVITY PLUG CHRYSLER P/N 56038308, FCI P/N 54200005 WHEN REQ'D
USE WITH 2.80MM APEX FEM TERM PER C15004-CUST SYM ABOUT CENTERLINE FOR 180° ORIENTATION

DIRECT CONNECT DRAWING NO. FCI G36003 CHRYSLER 56038158

TEST METHOD PER SAE/USCAR-2 REV.5 CONNECTOR ENGAGE & DISENGAGE WITH LATCH DEPRESSED FORCE NOT TO EXCEED 75 N. FOR THIS SYSTEM

CPA SEATING FORCES - 40 N. MAX

WEDGE SEATING FORCES - 100 N. MAX

*** SUPPLIER, MOLD & CAVITY I.D. SIGNIFIES TOOL OWNERSHIP, FOR REFERENCE

ANNUAL QUALITY REQUIREMENTS:
IT IS PERMISSIBLE TO PERFORM CONTINUOUS CONFORMANCE PER FCI SPECIFICATION #AQA-001 INSTEAD OF ANNUAL LAYOUT & ANNUAL PV REQUIREMENTS OF QS-9000 SECTION 2 & PF 9600

ALL NON-REFERENCE DIMENSIONS ARE REQUIRED

- USE INDEX A, BLACK SEALED AND UNSEALED FOR ALL AFFECTED INSULATOR CAVITIES

- CURRENT PRODUCTION TOOLING

- POINT OF LAST RUN

SERVICE TOOLING GUIDE INFORMATION PER APEX TRAINING MANUAL

MUST CONFORM TO THE FOLLOWING CHRYSLER/YNA STANDARDS:

PF-9600 PERFORMANCE (CHRYSLER) EXCEPT AS NOTED ABOVE

SAE/USCAR-2 REV.5 CONNECTOR LATCH PERFORMANCE

PS-7300 QUALITY ASSURANCE (CHRYSLER)

PS-4480-CEK-4 (CHRYSLER) PART I.D., (G-009-2 YNA)

PS-9065 REGRIND (CHRYSLER), (G-009-3 YNA)

PS-9227 DATA EXCHANGE (CHRYSLER), (G-009-7 YNA)

PS-10052 INFORMATION SECURITY (CHRYSLER)

THIS DRAWING (H59001) REPLACES CHRYSLER DRAWING NUMBER 56038160 LEVEL "E"
CHRYSLER DRAWING IS FOR REFERENCE ONLY

FCI P/N WITH SUFFIX "N" DESIGNATES ASSEMBLIES W/O CPA

MATING PART NUMBER CHART

INDEX TYPE	COLOR	SEALED/ UNSEALED	FCI (FEMALE ASSEMBLY PART NUMBERS)	CUSTOMER (FEMALE ASSEMBLY PART NUMBERS)	FCI (MATING ASSEMBLY PART NUMBER FOR REFERENCE ONLY)	CUSTOMER (MATING ASSEMBLY PART NUMBER FOR REFERENCE ONLY)
D	NATURAL	UNSEALED	54200303N	N/A	54200307	N/A
		UNSEALED	54200303	C 56038156	54200307	C 56038170
		SEALED	54200311N	N/A	54200315	N/A
		SEALED	54200311	C 56038152	54200315	C 56038166
C	DK GREY	UNSEALED	54200302N	N/A	54200306	N/A
		UNSEALED	54200302	C 56038155	54200306	C 56038169
		SEALED	54200310N	N/A	54200314	N/A
		SEALED	54200310	C 56038151	54200314	C 56038165
	DK BROWN	SEALED	F374110	N/A	F674110	N/A
B	LT GREY	UNSEALED	54200301N	N/A	54200305	N/A
		UNSEALED	54200301	C 56038154	54200305	C 56038168
		SEALED	54200309N	N/A	54200313	N/A
		SEALED	54200309	C 56038150	54200313	C 56038164
	DK BLUE	SEALED	F274110	N/A	F574110	N/A
A	BLACK	UNSEALED	54200300N	N/A	54200304	N/A
		UNSEALED	54200300	C 56038153	54200304	C 56038167
		SEALED	54200308N	N/A	54200312	N/A
		SEALED	54200335N	N/A	54200312	N/A
		SEALED	54200308	C 56038149	54200312	C 56038163
		SEALED	54200308	C 56038149	54200312	C 04794703AA
		SEALED	54200308	C 56038149	54200312	C 04794703AB
A	DK GRN	SEALED	54200346N	—	54200354	—
		SEALED	54200346	—	54200354	—

CUSTOMER: C CHRYSLER
F FORD
GM GENERAL MOTORS
CU CUMMINS

FCI - FRAMATOME CONNECTORS INTERNATIONAL
YNA - YAZAKI NORTH AMERICA

FCI	52772 OR 52772 H	SEE CHART
VENDOR	VENDOR CODE	P/N

| CHART-ASSEMBLY PART NUMBERS | | |

X-ON Electronics

Largest Supplier of Electrical and Electronic Components

Click to view similar products for Automotive Connectors ***category:***

Click to view products by APTIV ***manufacturer:***

Other Similar products are found below :

003-018-000 60403001 60993906-B 629515004020001 M902-2131 M902-2161 72.330.1035.1 73.353.4028.0 F119300-B F166900 F258300-B F358300-B F407400 F444110 F487000 F509500B-B 827153-1 8N1515-32-24P 9-1326729-8 925474-1 928905-1 964562-4 968782-1 GT17SA-8DS-HU 98891-1012 98947-1016 12004475-L 12010290 12010309-B 12015454 12020219-B 12020308 12041318-B 12052225-L 12052466 12059125 12064869 12004327-B 12010503-B 12015308 12015384 12015909 1-21030-1 12041254 12041318 12047946-B 12047957 12047957-L 12059473 12066261