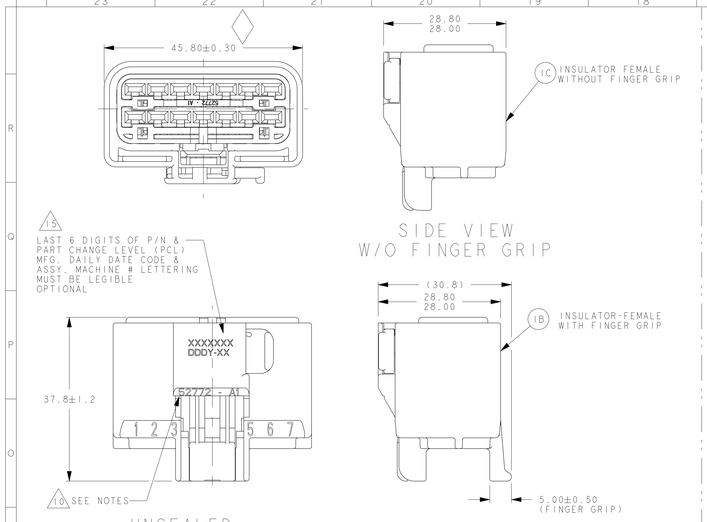

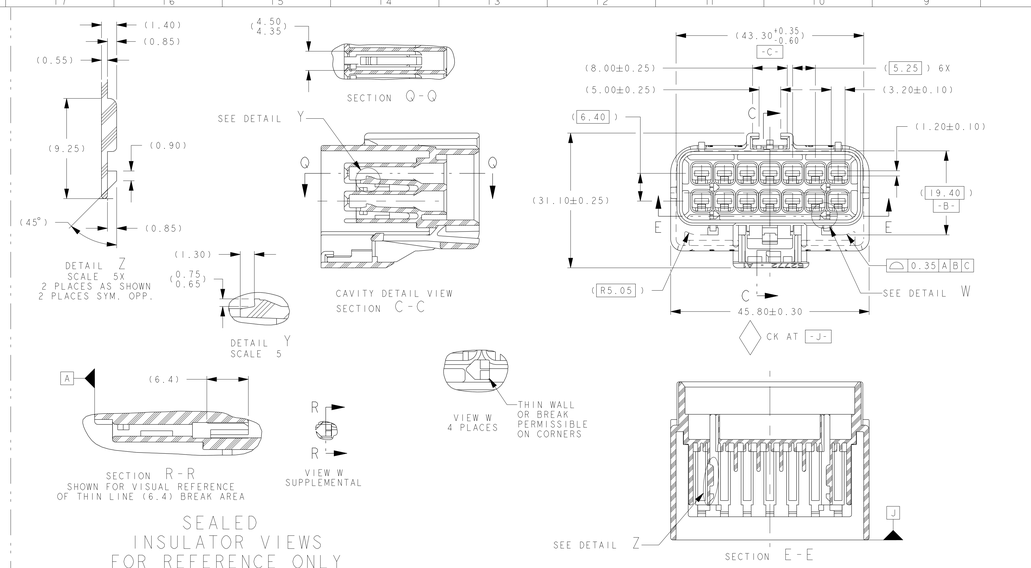

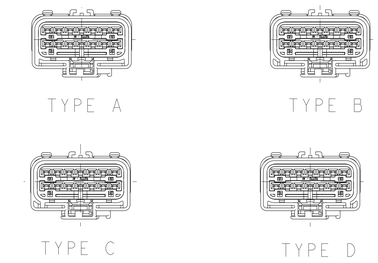

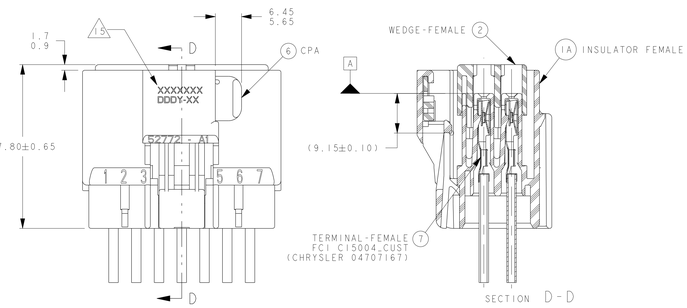

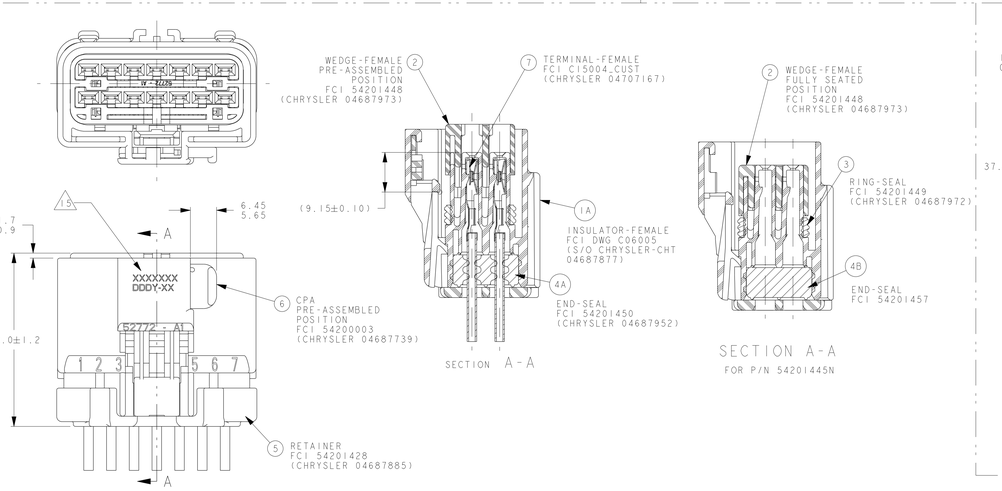

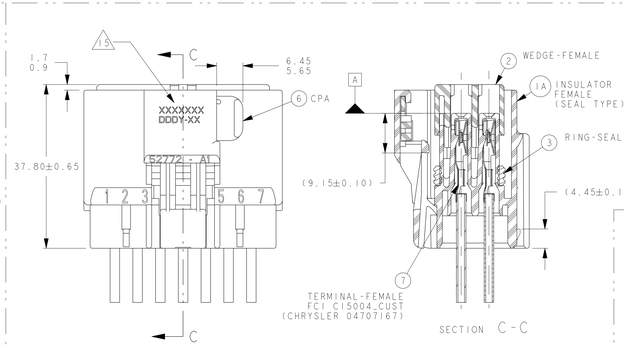

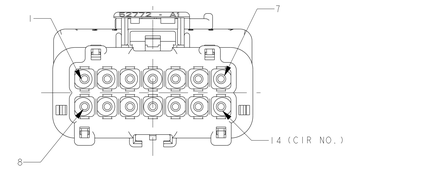

NOTES:

1. QUALITY ASSURANCE REQUIREMENTS PER CHRYSLER PS-7300:I SPC DATA REQUIRED
2. ENGINEERING APPROVAL OF SUPPLIER SAMPLES IS REQUIRED PRIOR TO AUTHORIZATION OF PART PRODUCTION
3. CHANGES IN DESIGN COMPOSITION OR PROCESSING FROM THE PART PREVIOUSLY APPROVED FOR PART PRODUCTION REQUIRES PRIOR ENGINEERING APPROVAL
4. WIRING FABRICATORS MUST PURCHASE FROM SOURCES SHOWN
5. ALL THE SEALED APPLICATIONS WITH 54201450 END SEAL MUST BE USED WITH CHRYSLER WIRE SPEC. MS-8288 OR MS-9502 THIN WALL X-LINK 20,18, 16, 14 & 12 GAGE WIRES ONLY UNLESS OTHERWISE SPECIFIED (INSULATIONS Ø1.70 MIN TO Ø3.35 MAX.) ISO THIN WALL EQUIVALENTS ALLOWED

5A. P/N'S WITH C855900 END SEAL MUST BE USED WITH WIRE INSULATION RANGE FROM Ø1.90MIN TO 3.70MAX (18AWG TO 12AWG OR $1mm^2$ TO $4mm^2$ ISO THIN WALL)

6. ALL NON-SEALED APPLICATIONS MAY BE USED WITH ANY WIRE INSULATION 22 GAGE THRU 10 GAGE & ISO THIN WALL EQUIVALENTS PROVIDING THAT A TERMINAL GRIP FOR THAT CORE / INSULATION COMBINATION IS SHOWN ON THE FEMALE TERMINAL DRAWING

   MAX. INSULATION CRIMP WIDTH = 4.50
   MAX. INSULATION CRIMP HEIGHT = 4.50
   MAX. INSULATION DIA. =4.09 (10 GA THIN WALL)

7. USE WITH CAVITY PLUG FCI P/N 54200005 (C) 56038308 ON SKIRTED PARTS ONLY WHEN REQUIRED
   USE WITH DOUBLE X-MAS TREE CLIP P/N (C) 04707091 WHEN REQUIRED
   USE WITH DOUBLE X-MAS TREE CLIP P/N (C) 04625797 WHEN REQUIRED
   USE WITH 2.80MM APEX FEMALE TERMINAL PER C15004-CUST SYMMETRICAL ABOUT CENTERLINE FOR 180° ORIENTATION
8. DIRECT CONNECT DRAWING NO. H36014 (CHRYSLER 04707029)
9. TEST METHOD PER CHRYSLER PERFORMANCE SPEC# SAE/USCAR-2 REV 5. CONNECTOR ENGAGE & DISENGAGE WITH LATCH DEPRESSED FORCE NOT TO EXCEED 142N FOR THIS SYSTEM

   PRESSURE 3 PSI (22 KPA) PER PF-752(T)

   CPA SEATING FORCES - 40N MAX

   WEDGE SEATING FORCES - 142N MAX

   X-MAS TREE CLIP INSERTION FORCES - 75N MAX
10. SUPPLIER I.D SINGIFIES TOOL OWNERSHIP, FOR REFERENCE
11. ANNUAL QUALITY REQUIREMENTS:
    IT IS PERMISSBLE TO PERFORM CONTINUOUS CONFORMANCE PER FCI SPECIFICATION #AQA-001 INSTEAD OF ANNUAL LAYOUT & ANNUAL PV REQUIREMENTS OF QS-9000 SECTION 2 & SAE/USCAR-2 REV 5

    ALL NON-REFERENCE DIMENSIONS ARE REQUIRED

    - USE INDEX A, BLACK SEALED AND UNSEALED FOR ALL AFFECTED INSULATOR CAVITIES
    - CURRENT PRODUCTION TOOLING
    - POINT OF LAST RUN

    SERVICE TOOLING GUIDE INFORMATION PER APEX TRAINING MANUAL
12. MUST CONFORM TO THE FOLLOWING CHRYSLER/YNA STANDARDS:

    SAE/USCAR-2 REV-5 EXCEPT AS NOTED ABOVE
    PS-7300 QUALITY ASSURANCE (CHRYSLER)
    PS-4480-CEK-4 (CHRYSLER) PART I.D., (G-009-2 YNA)
    PS-9065 REGRIND (CHRYSLER), (G-009-3 YNA)
    PS-9227 DATA EXCHANGE (CHRYSLER), (G-009-7 YNA)
    PS-10052 INFORMATION SECURITY (CHRYSLER)
13. THIS DRAWING (H59008) REPLACES CHRYSLER DRAWING NUMBER 04687876 LEVEL "N"
    CHRYSLER DRAWING IS FOR REFERENCE ONLY
14. FCI P/N'S WITH SUFFIX "N" DESIGNATES ASSEMBLIES W/O CPA
15. SEE ZONE Q22 FOR PART IDENTIFICATION CALL OUT

* INDICATES END SEAL 54201450 OR C855900 & RETAINER 54201428 OR HINGE TYPE PROVIDED LOOSE PIECE AND INSTALLED AT WIRE HARNESS ASSEMBLY, SEE HARNESS ASSEMBLY FOR HINGE RETAINER P/N

MATING PART NUMBER CHART

INDEX	COLOR	SEALED / UNSEALED	FCI	CUSTOMER	OTHER CUSTOMERS	FCI	CHRYSLER	OTHER CUSTOMERS
			FEMALE ASSEMBLY PART NUMBERS			(MATING ASSEMBLY PART NUMBERS)		
D	LT GRN	UNSEALED	54201452N	N/A	N/A	DIRECT CONNECT APPLICATION INDEX D		
		UNSEALED	54201452	(C) 04868345AA	N/A	DIRECT CONNECT APPLICATION INDEX D		
	NATURAL	UNSEALED	54201467	N/A	N/A	54201468	N/A	N/A
		UNSEALED	54201403N	N/A	N/A	DIRECT CONNECT APPLICATION INDEX D		
		UNSEALED	54201403	(C) 04687932	YNA 7283-4649	DIRECT CONNECT APPLICATION INDEX D		
		SEALED	54201414N	N/A	N/A	54201418	N/A	N/A
		SEALED	54201414	(C) 04687928	YNA 7283-4749	54201418	(C) 04707243	N/A
C	DK GREY	UNSEALED	54201402N	N/A	N/A	DIRECT CONNECT APPLICATION INDEX C		
		UNSEALED	54201402	(C) 04687931	YNA 7283-4648-10	DIRECT CONNECT APPLICATION INDEX C		
		SEALED	54201413N	N/A	N/A	54201417	N/A	N/A
		SEALED	F371010	N/A	N/A	JOHN DEERE LITTLE FUSE LOAD CENTER		
		SEALED	△ F366900	N/A	N/A	DIRECT CONNECT APPLICATION INDEX C		
		SEALED	54201413	(C) 04687927	YNA 7283-4748-10	54201417	(C) 04707241	N/A
B	LT GREY	UNSEALED	54201453N	N/A	N/A	DIRECT CONNECT APPLICATION INDEX B		
		UNSEALED	54201453	N/A	YNA 7283-4747-40	DIRECT CONNECT APPLICATION INDEX B		
		UNSEALED	54201401N	N/A	N/A	54201405	N/A	N/A
		UNSEALED	54201401	(C) 04687930	YNA 7283-4647-40	54201405	(C) 04687936	N/A
		SEALED	54201412N	N/A	N/A	54201416	N/A	N/A
		SEALED	F271010	N/A	N/A	JOHN DEERE LITTLE FUSE LOAD CENTER		
		SEALED	△ F266900	N/A	N/A	DIRECT CONNECT APPLICATION INDEX B		
		SEALED	54201412	(C) 04687926	YNA 7283-4645-40	54201416	(C) 04687934	N/A
A	BLACK	UNSEALED	54201442N	N/A	N/A	54201404	N/A	N/A
		UNSEALED	54201442	(C) 04868197AA	N/A	54201404	(C) 04687935	N/A
		UNSEALED	54201400N	N/A	N/A	54201404	N/A	N/A
		UNSEALED	54201400	(C) 04687929	YNA 7283-4644-30	54201404	(C) 04687935	N/A
		SEALED	54201411	(C) 04687925	YNA 7283-4641-30	54201415	(C) 04867933	N/A
		SEALED	54201419N	(C) *04707442	YNA 7283-4746-30	54201415	(C) 04867933	N/A
		SEALED	54201443	(C) *04759591AA	YNA 7283-4341-30	54201415	(C) 04867933	JD/LF LOAD CENTER
		SEALED	54201445N	(C) 04707405	N/A	54201415	(C) 04867933	N/A
		SEALED	△ F166900	N/A	N/A	DIRECT CONNECT APPLICATION INDEX A		
		SEALED	54201456N	N/A	(GM) 15125222	N/A	N/A	(GM) 15125233

FCI - FRAMATOME CONNECTORS INTERNATIONAL
YNA - YAZAKI NORTH AMERICA
(C) - CHRYSLER (GM)- GENERAL MOTORS
(JD)- JOHN DEERE (LF)- LITTLE FUSE

ASSEMBLY PART NUMBERS

FCI P/N'S (CUSTOMER P/N'S)	OTHER CUST P/N'S	UNSEALED W/O CPA	UNSEALED W/CPA	SEALED W/CPA	SEALED W/O CPA
54201453N	N/A	N/A	N/A	N/A	N/A
54201452N	N/A	N/A	N/A	N/A	N/A
54201442N	N/A	N/A	N/A	N/A	N/A
54201400N	N/A	N/A	N/A	N/A	N/A
54201401N	N/A	N/A	N/A	N/A	N/A
54201402N	N/A	N/A	N/A	N/A	N/A
54201403N	N/A	N/A	N/A	N/A	N/A
54201472	N/A	N/A	YNA 7283-4747-40	YNA 7283-4641-30	YNA 7283-4746-30
54201453	N/A	N/A	N/A	YNA 7283-4645-40	N/A
54201452	(C) 04868345AA	(C) 04868345AA	N/A	YNA 7283-4748-10	N/A
54201442	(C) 04868197AA	(C) 04868197AA	N/A	N/A	(C) 04707442
54201400	N/A	(C) 04687929	YNA 7283-4644-30	YNA 7283-4749	N/A
54201401	N/A	(C) 04687930	YNA 7283-4647-40	YNA 7283-4341-30	(C) *04759591AA
54201402	N/A	(C) 04687931	YNA 7283-4648-10	N/A	N/A
54201403	N/A	(C) 04687932	YNA 7283-4649	N/A	N/A
54201467	N/A	N/A	N/A	N/A	N/A
54201411	(C) 04687925	(C) 04687925	YNA 7283-4641-30	N/A	N/A
54201412	(C) 04687926	(C) 04687926	YNA 7283-4645-40	N/A	N/A
△ F166900	N/A	N/A	N/A	N/A	N/A
54201413	(C) 04687927	(C) 04687927	YNA 7283-4748-10	N/A	N/A
△ F366900	N/A	N/A	N/A	N/A	N/A
54201414	(C) 04687928	(C) 04687928	YNA 7283-4749	N/A	N/A
54201443	(C) *04759591AA	(C) *04759591AA	YNA 7283-4341-30	N/A	N/A
*F271010	N/A	N/A	N/A	N/A	N/A
*F371010	N/A	N/A	N/A	N/A	N/A
*54201419N	(C) *04707442	(C) *04707442	YNA 7283-4746-30	N/A	N/A
54201445N	(C) 04707405	(C) 04707405	N/A	N/A	N/A
54201452N	N/A	(GM) N/A	(GM) N/A	N/A	N/A
54201413N	N/A	N/A	N/A	N/A	N/A
54201414N	N/A	N/A	N/A	N/A	N/A

	UNSEALED	SEALED
REQUIRED	20 TO 10 AWG (Ø1.50 TO Ø4.09)	SEE NOTES
PLUG		SEE NOTES

CONNECTOR ASSEMBLY TEMPERATURE CLASS PER SAE/USCAR-2 REV 5

PART CHANGE LEVEL (PCL)

ITEM	FCI P/N	CHRYSLER P/N	PART NAME	MATERIAL
1A	54201432	(C) 04687804	SEALED, INDEX A; BLACK	PA66 GF
1B	54201433	(C) 04687954	SEALED, INDEX B; LT GRY	PA66 GF
1C	54201434	(C) 04687955	SEALED, INDEX C; DK GRY	PA66 GF
1D	54201435	(C) 04687956	SEALED, INDEX D; NATURAL	PA66 GF
1E	54201420	(C) 04707291	UNSEALED, INDEX A; BLK W/FINGER GRIP	PA66 GF
1F	54201421	(C) 04707292	UNSEALED, INDEX B; LT GRY W/FINGER GRIP	PA66 GF
1G	54201422	(C) 04707293	UNSEALED, INDEX C; DK GRY W/FINGER GRIP	PA66 GF
1H	54201423	(C) 04707294	UNSEALED, INDEX D; NATURAL W/FINGER GRIP	PA66 GF
1J	54201451	N/A	UNSEALED, INDEX D; LT GRN W/O FINGER GRIP	PA66 GF
1K	54201466	N/A	UNSEALED, INDEX D; NATURAL W/O FINGER GRIP	PA66 GF
2	54201448	(C) 04687973	WEDGE-FEMALE;ROYAL BLUE	PA66 GF
3	54201449	(C) 04687972	RING SEAL;RED	SILICONE
4A	54201450	(C) 04687952	END SEAL;LIGHT BLUE (INSULATION RANGE Ø1.70 - Ø3.35)	SILICONE
4B	54201457	(**93008014)	END SEAL;BRT YELLOW (WITHOUT HOLES)	SILICONE
4C	C855900	N/A	END SEAL; WHITE (INSULATION RANGE Ø1.90 - Ø3.70)	SILICONE
5	54201428	(C) 04687948	RETAINER;BLACK	PA66 GF
6	54200003	(C) 04687739	CPA LATCH;RED	PA66 GF

** INTERLOCK P/N

△ INDICATES THIS PART AVAILABLE THROUGH TTI

FCI	52772 OR 52772H	SEE CHART	
VENDOR	VENDOR CODE	P/N	

11-00154	B-C9	MATERIAL PA66GF WAS PA66GF35, TITLE BLOCK UPDATED PCL NOT AFFECTED
11802	ALL	ASSEMBLY P/N'S F271010, F371010 ADDED & INSULATION RANGE ADDED. NOTES & CHART UPDATED. REVISED AND REDRAWN SEE REV M FOR PREVIOUS CHANGES
ECN NO.	ZONE	CHANGE DESCRIPTION

PRODUCT SPEC: APEX 2.8MM
TRACKING SPEC:
APPLICATION SPEC: -
THIS DRAWING AND ALL OTHER INFORMATION CONTAINED THEREIN IS PROPRIETARY AND THE PROPERTY OF FCI.This drawing may not be copied, reproduced or disclosed to any third party without the expressed written permission of FCI.FCI Apr;©1999
TOLERANCES: ± FRC #8.23 ± ANGLE ±0.5°
MATERIAL: SEE CHART
SURFACE FINISH: -
COMPONENT №: H59016, 036014
COLOUR: SEE CHART
DO NOT MEASURE DRAWING
TOOL NO.: A-040
ECO Lev.: Code: AN
3RD ANGLE
DIMENSION IN MILLIMETERS
CAD SYSTEM: pro / eng
DWG SIZE: A0

	DATE	NAME
CREATED BY	2005-07-21	RAJ KUMAR
MODIFIED BY	2012/01/06	Sunita Dalki
CHECKED BY	2012/01/13	Rob CUE
APPROVED BY	2012/01/13	Jeff CAMPBELL
FILE NAME	H59008	

TITLE: CHART-ASSEMBLY 14WAY FEMALE (SEALED & UNSEALED)
PROJECT: 2.80MM APEX CONNECTOR SYSTEM
ESR NO.(USA:WI225,624)EXT. NO.:
DOCUMENT UNDER FCIS CONTROL NO MODIFICATION ALLOWED OUTSIDE

DRAWING NUMBER: H59008
REV.: Y
APPROVAL LEVEL: -
STATE: SERIAL RELEASED
PART NUMBER:
REV.:
SHEET: 1 OF 1
SCALE: See Table

X-ON Electronics

Largest Supplier of Electrical and Electronic Components

Click to view similar products for Automotive Connectors ***category:***

Click to view products by APTIV ***manufacturer:***

Other Similar products are found below :

003-018-000 60403001 60993906-B 629515004020001 M902-2131 M902-2161 72.330.1035.1 73.353.4028.0 F119300-B F166900 F258300-B F358300-B F407400 F444110 F487000 F509500B-B 827153-1 8N1515-32-24P 9-1326729-8 925474-1 928905-1 964562-4 968782-1 GT17SA-8DS-HU 98891-1012 98947-1016 12004475-L 12010290 12010309-B 12015454 12020219-B 12020308 12041318-B 12052225-L 12052466 12059125 12064869 12004327-B 12010503-B 12015308 12015384 12015909 1-21030-1 12041254 12041318 12047946-B 12047957 12047957-L 12059473 12066261