N°	NOTE	DESIGNATION
A	SPECIFICATION	FOLLOWING FCI PRODUCT SPECIFICATION
B	INTERFACE "CULOT PG20"	FOLLOWING IEC 34B/1225/FDIS project number:IEC 60061-1,A37,Ed.3DB(page1/4)
C	INTERFACE "DOUILLES & CONNECTEURS"	FOLLOWING IEC 24B/1226/FDIS project number:IEC 60061-2,A34,ED.3DB(page3/4)
D	TERMINALS	GTS2-1.5 ref. F112300 gauge 0.5 to 0.85²
		GTS2-1.5 ref. F343100 gauge 1 to 1.3²
		GTS2-1.5 refs F443100 gauge 1.4 to 2²
E	SWS	211M0007 (YELLOW) WIRE 0.5² TO 0.75² / 211M0008 (GREEN) WIRE 1² TO 2²
F	USER'S MANUAL	FOLLOWING PU120
G	CONNECTOR'S WEIGHT	5,70g

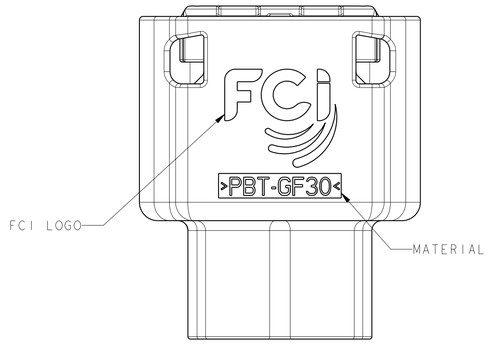

CODING PG20-7 REPRESENTED IN DELIVERY POSITION

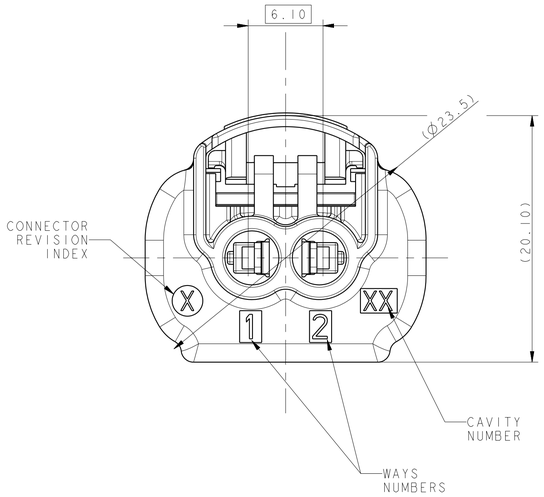

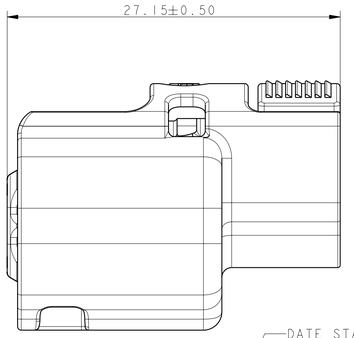

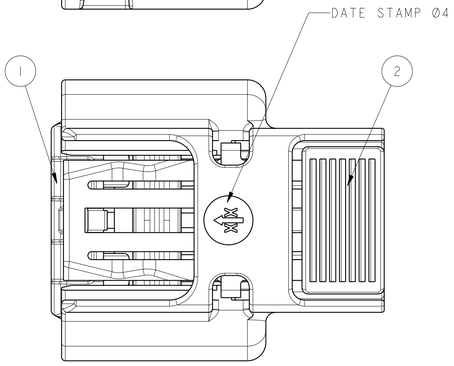

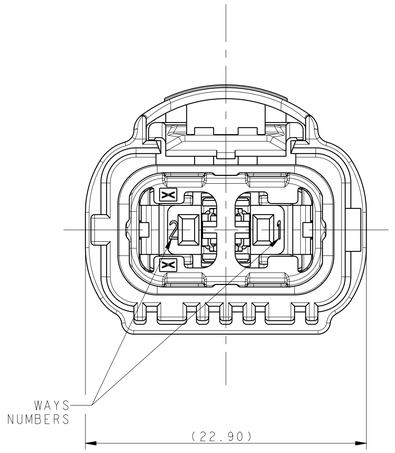

Rep	DESIGNATION	MATERIAL	COLOR
1	GRID TPA	PBT-GF15	YELLOW
2	2W FEMALE HOUSING	PBT-GF30	SEE TABLE
3	INTERFACIAL SEAL	LSR 50Sh 4% OIL IN THE MATERIAL AND VISIBLE ON ALL SURFACES	BLUE

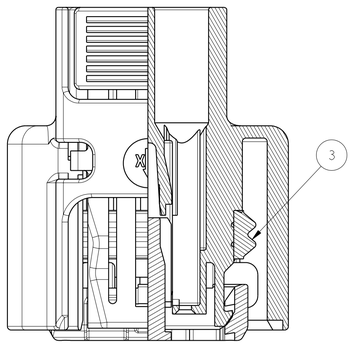

SECTION *A-A*

PG20-1	PG20-2	PG20-3	PG20-4	PG20-5	PG20-6	IEC REFERENCE
F450200	-	F550200	F650200	-	-	FCI REFERENCE
BROWN	-	GREY	BLACK	-	-	HOUSING COLOR
B	-	B	B	-	-	REVISION INDEX
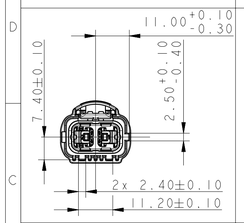		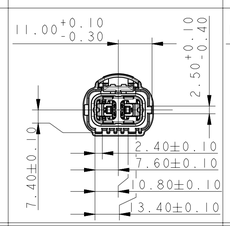	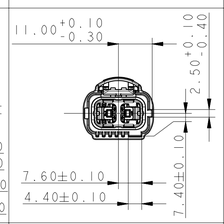			VIEW

PG20-7	PG20-8	PG20-9	PG20-10	PG20-11	PG20-12	IEC REFERENCE
F750200	-	-	-	-	-	FCI REFERENCE
NATURAL	-	-	-	-	-	HOUSING COLOR
B	-	-	-	-	-	REVISION INDEX
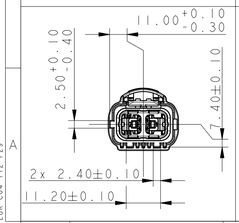						VIEW

SCALE 1:1

ECN-NO. NUMERO ECN	POSITION POSITION	CHANGE DESCRIPTION MODIFICATION
-	-	-
-	-	-
-	-	-
-	-	-
-	-	ADDED TOLERANCES FOR ALL CODINGS (D)

PRODUCT SPEC. SPECIF. PRODUIT: -
PACKAGING SPEC. SPECIF. EMBALAGE: -
APPLICATION SPEC. SPECIF. APPLICATION: -

THIS DRAWING AND ALL OTHER INFORMATION CONTAINED THEREIN IS PROPRIETARY AND THE PROPERTY OF FCI.This drawing may not be copied, reproduced or disclosed to any third party without the expressed written permission of FCI. © FCI April 1999

CE PLAN ET LES INFORMATIONS CONTENUES DANS CE PLAN SONT PROPRIETAIRES ET LA PROPRIETE DE FCI. Ce plan ne peut être copié, reproduit ou transmis sans l'autorisation expresse et écrite de FCI. © FCI Avril 1999

TOLERANCES TOLERANCES: ±0.1 ±2° -
COUNTERPART Nº. CONTRE PARTIE Nº: -
MATERIAL : MATIERE : - SEE TABLE
SURFACE FINISH ETAT DE SURFACE: -
COLOUR : COULEUR : SEE TABLE -
DO NOT MEASURE DRAWING NE PAS PRENDRE DE COTES
TOOL NO. OUTIL Nº: -
ECO Loc. Code CODE B.E.: FE
ISO PROJECTION PROJECTION ISO
DIMENSION IN MILLIMETERS DIMENSIONS EN MILLIMETRES
CAD SYSTEM: pro / eng.
DWG SIZE FORMAT: A1

	DATE DATE	NAME NOM
CREATED BY CREE PAR	2008/07/18	J.LEBRUN
MODIFIED BY MODIF. PAR	2009/05/20	J.LEBRUN
CHECKED BY VERIF. PAR	2009/05/20	O.GOLETTO
APPROVED BY APPR. PAR	2009/05/25	Thierry LEGUAY

TITLE DESIGNATION: 2W 1.5 GTS2 FEMALE CONNECTOR
PROJECT PROJET: PG20 SEALED FAMILY
ESN NO. NUMERO ESN: -
CAT. No. NUMERO CAT.: -
FILE NAME NOM DE FICHIER: PCC0585680
DOCUMENT UNDER PDS CONTROL DOCUMENT GERE SOUS P.D.S.
NO MODIFICATION ALLOWED OUTSIDE PAS DE MODIFICATION EN DEHORS

DRAWING NUMBER REF. PLAN: PCC0585680
REV. IND.: D
STATE ETAT: SERIAL RELEASED
PART NUMBER REF. ARTICLE: See Table
REV. IND.: -
APPROVAL LEVEL NIV. D'APPROBATION: -
SHEET FEUILLE: 1 of 1 sur 1
SCALE ECH.: 2:1

X-ON Electronics

Largest Supplier of Electrical and Electronic Components

Click to view similar products for Automotive Connectors ***category:***

Click to view products by APTIV ***manufacturer:***

Other Similar products are found below :

003-018-000 60403001 60993906-B 629515004020001 M902-2131 M902-2161 72.330.1035.1 73.353.4028.0 F119300-B F166900 F258300-B F358300-B F407400 F444110 F487000 F509500B-B 827153-1 8N1515-32-24P 9-1326729-8 925474-1 928905-1 964562-4 968782-1 GT17SA-8DS-HU 98891-1012 98947-1016 12004475-L 12010290 12010309-B 12015454 12020219-B 12020308 12041318-B 12052225-L 12052466 12059125 12064869 12004327-B 12010503-B 12015308 12015384 12015909 1-21030-1 12041254 12041318 12047946-B 12047957 12047957-L 12059473 12066261