| MALE ASSEMBLY NUMBERS | CAD NUMBER (REFERENCE) | PCL | KEY OPTIONS (HOUSING) | COLOR | CLIP SLOT OPTIONS | COMPONENTS: HOUSING | MALE TPA | MALE RETAINER | MAT SEAL | SHORTING BAR | PLUGGED (X) SEAL POSITIONS 1 | 2 | 3 | 4 | 5 | 6 | 7 | 8 | 9 | 10 | 11 | 12 | 13 | 14 | 15 | 16 | 17 | 18 | 19 | 20 | 21 | 22 | 23 | 24 | TEST METHOD SEE NOTE #2 | MATES WITH FEMALE ASSEMBLY (REFERENCE ONLY) | |
|---|---|---|---|---|---|---|---|---|---|---|---|---|---|---|---|---|---|---|---|---|---|---|---|---|---|---|---|---|---|---|---|---|---|---|---|---|---|
| | | | | | | | | | | | 2.8 | 2.8 | SB | | SB | | SB | | SB | | 2.8 | 2.8 | 2.8 | 2.8 | SB | | SB | | SB | | SB | | 2.8 | 2.8 | | | |
| PP10000678 | PC10429520 | A | A | BLACK | 1 | PP10000716 | | | | | | | | | | | | | | | | | | | | | | | | | | | | | | PP10000655 | PP10000656 |
| PP10000679 | PC10429521 | A | B | GRAY | 1 | PP10000717 | | | | | | | | | | | | | | | | | | | | | | | | | | | | | | PP10000659 | PP10000658 |
| PP10000680 | PC10429522 | A | C | BROWN | 1 | PP10000718 | | | | N/A | | | | | | | | | | | | | | | | | | | | | | | | | USCAR-2 Rev 5 Class 3 (125°) | PP10000660 | PP10000661 |
| PP10000681 | PC10429523 | A | D | GREEN | 1 | PP10000719 | | | | | | | | | | | | | | | | | | | | | | | | | | | | | | PP10000662 | PP10000664 |
| PP10000682 | PC10429524 | A | E | YELLOW | 1 | PP10000720 | | | | 54251496 | | | | | SB | | | | | | | | | | | | | | | | | | | | USCAR-2 Rev 5 Class 1 (85°) | PP10000665 | |
| F252000 | PC10429525 | A | F | YELLOW | 1 | PP10001774 | | | | | | | | | SB | | SB | | | | | | | | | | | | | | | | | | | F322000 | |
| F552000 | PC10429528 | A | A | BLACK | 2 | PP10001778 | | | | | | | | | | | | | | | | | | | | | | | | | | | | | | PP10000655 | PP10000656 |
| F652000 | PC10429529 | A | B | GRAY | 2 | PP10001779 | | | | | | | | | | | | | | | | | | | | | | | | | | | | | | PP10000659 | PP10000658 |
| F752000 | PC10429530 | A | C | BROWN | 2 | PP10001780 | | | | N/A | | | | | | | | | | | | | | | | | | | | | | | | | USCAR-2 Rev 5 Class 3 (125°) | PP10000660 | PP10000661 |
| F852000 | PC10429531 | A | D | GREEN | 2 | PP10001781 | | | | | | | | | | | | | | | | | | | | | | | | | | | | | | PP10000662 | PP10000664 |
| F952000 | PC10429532 | A | E | YELLOW | 2 | PP10001782 | | | | 54251496 | | | | | SB | | | | | | | | | | | | | | | | | | | | USCAR-2 Rev 5 Class 1 (85°) | PP10000665 | |
| F062000 | PC10429533 | A | F | YELLOW | 2 | PP10001783 | | | | | | | | | SB | | SB | | | | | | | | | | | | | | | | | | | F322000 | |
| F462000 | PC10429536 | A | D | BLACK | 0 | PP10001777 | | | | N/A | | | | | | | | | | | | | | | | | | | | | | | | | USCAR-2 Rev 5 Class 3 (125°) | F622000 | F722000 |
| F568000 | PIC0544004 | B | A | BLACK | 1 | PP10000716 | | PP10001818 | | N/A | | | | | | | | X | | X | | | | | X | | X | X | | X | | X | | | | USCAR-2 Rev 5 Class 3 (125°) | F668000 | |
| F485300 | PC10597387 | E | | | | | | | | | X | X | X | X | X | X | X | X | X | X | X | X | X | X | X | X | X | X | X | X | X | X | X | X | | | |

COMPONENTS: PP10001728 (HOUSING); PP10001819 (MALE RETAINER); PP10001600 (MAT SEAL)

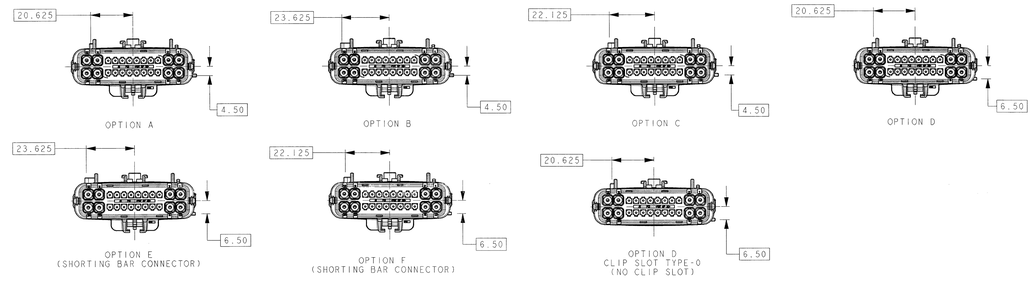


POLARIZATION OPTIONS

ACTUAL SIZE VIEWS

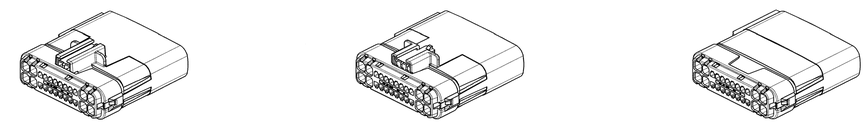

CLIP SLOT TYPE - 1 CLIP SLOT TYPE - 2 CLIP SLOT TYPE - 0

ACTUAL SIZE VIEWS

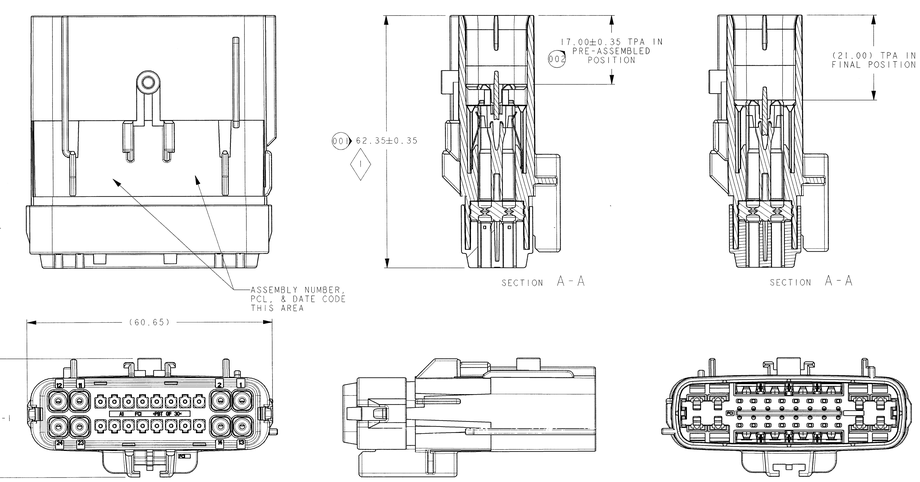


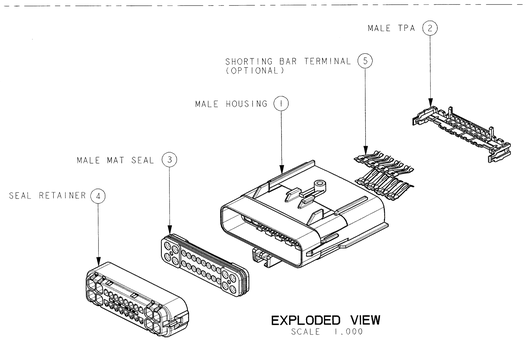


EXPLODED VIEW
SCALE 1.000

| | APPLICABLE COMPONENTS | | |
|---|---|---|---|
| FCI COMP. PART NUMBER | ITEM DESCRIPTION | PLATING | GRIP SIZE |
| 54001626 | APEX 150 TERMINAL | TIN | 16,18 |
| 54002001 | APEX 150 TERMINAL | TIN | 20,22 |
| 54001628 | APEX 150 TERMINAL | GOLD | 16,18 |
| 54002003 | APEX 150 TERMINAL | GOLD | 20,22 |
| 54001629 | APEX 150 TERMINAL-FOR SHORTING BAR | GOLD | 16,18 |
| 54002004 | APEX 150 TERMINAL-FOR SHORTING BAR | GOLD | 20,22 |
| 54001001 | APEX 2.8 TERMINAL | TIN | 12 |
| 54001401 | APEX 2.8 TERMINAL | TIN | 14,16 |
| 54001801 | APEX 2.8 TERMINAL | TIN | 18 |
| 54240003 | APEX 150 2.8mm SEAL PLUG - MALE | - | - |
| 54241629 | APEX 150 UNIVERSAL SEAL PLUG | - | - |
| 54200010 | DBL X-MASTREE CLIP W/FORWARD STOP (FOR TYPE 1 CLIPSLOT ONLY) | - | - |

NOTES:

1) MAXIMUM TEMPERATURE CLASS:
   SEE CHART

2) CONFORMS TO TEST METHOD AS SHOWN IN CHART

3) CONNECTOR MAY BE USED WITH THE FOLLOWING RANGE OF WIRE SIZES AND/TYPES:
   -APEX 150 TERMINALS:
     -SIZE: 22 GAGE- 16 GAGE- 1.50mm MIN O.D. TO 2.41mm MAX O.D.
     -TYPE: TXL (MIL123-A / MS-8288)
   -APEX 2.8 TERMINALS:
     -SIZE: 18 GAGE- 12 GAGE- 1.70mm MIN O.D. TO 3.35mm MAX O.D.
     -TYPE: TXL (MIL123-A / MS-8288)
   -CONTACT FCI ENGINEERING REGARDING USE OF OTHER WIRE SIZES AND/OR TYPES

4) CONNECTOR MAY BE USED WITH THE FOLLOWING TERMINALS:
   -FCI APEX150 AND APEX 2.8 WITH WIRE SIZES DEFINED IN NOTE 3. SEE FCI DRAWINGS J54011 AND C15005 FOR SPECIFIC PART NUMBERS AND CRIMPING REQUIREMENTS.
   -CONTACT FCI ENGINEERING REGARDING USE OF COMPATIBLE NON FCI TERMINALS

5) ANNUAL QUALITY REQUIREMENTS:
   IT IS PERMISSIBLE TO PERFORM CONTINUOUS CONFORMANCE PER FCI SPECIFICATION #AQA-001 INSTEAD OF ANNUAL LAYOUT AND ANNUAL PV REQUIREMENTS OF QS-9000 SECTION 2 AND SAE/USCAR-2 REV 4. FOR TERMINAL TO CONNECTOR AND TPA TO CONNECTOR ONLY.

6) FEMALE CONNECTORS EQUIPPED WITH OPTIONAL CLIPSLOT CAN ONLY BE MATED TO MALE CONNECTORS WITHOUT CLIPSLOT FEATURE. KEY OPTION J IS RESERVED FOR FEMALE CONNECTORS WITH CLIPSLOT FEATURES AND THEIR MALE COUNTERPARTS.
   -CONTACT FCI ENGINEERING FOR SPECIFIC PACKAGING REQUIREMENTS WHEN USING THESE CONFIGURATIONS

7) (1) QUALITY ASSURANCE REQUIREMENTS SPC DATA, REQUIRED

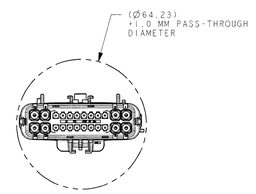


PASS-THROUGH
SCALE 1.000

UNCONTROLLED

**FCI AUTOMOTIVE**

10/17/2008

**AMERICAS**

FCI MASTER COPY WHEN IN RED

| | | |
|---|---|---|
| 10459 | CHART COMP. CHART | ADDED ASSEMBLY F485300, 54200010 WAS 56200010 |
| 1 | NOTES | REMOVED EXCEPTIONS FROM TEST METHOD NOTE |
| 10174 | DIM. CHART | REMOVED OPTION G AND H- OPTION D (NO CLIP SLOT) WAS J , ADDED NOTE #7 |
| 10050 | CHART | REPLACED RETAINER NUMBER FOR PART NUMBER F568000 |
| | - | REPLACED FORMAT, DRAWING NUMBER PCC0377514 WAS PC10377514 |
| | CHART | ADDED PART NUMBER F568000, REVISED TEST METHOD |
| 9658 | D-15 | ADDED APP COMP CHART |
| | NOTES | REVISED NOTES #1, #2 , #4, AND #6 |
| | - | REVISED DRAWING LAYOUT, REVISED TITLE |
| 9452 | - | DRAWING RELEASED |
| ECN-NO | ZONE | CHANGE DESCRIPTION |

PRODUCT SPEC. - | TOOLING SPEC. - | APPLICATION SPEC. - | This drawing and all other information contained therein is proprietary and the property of FCI. This drawing may not be copied, reproduced or disclosed to any third party without the expressed written permission of FCI. FCI April©1999

TOLERANCES ±0.1 ±2° | MATERIAL - | SURFACE FINISH -

COMPONENT No. - | COLOUR SEE CHART | CAD SYSTEM pro / eng.

DO NOT MEASURE DRAWING | TOOL NO. | DIM Lwr. Case AN | DIMENSION IN MILLIMETRE | IMC SIZE A0

| | DATE | NAME |
|---|---|---|
| CREATED BY | 2006/10/26 | Frank HOLLIS |
| REVIEWED BY | 2006/10/16 | Robert BAUMAN |
| CHECKED BY | 2006/10/17 | R BATCHER |
| APPROVED BY | 2006/10/17 | Jeff CAMPBELL |

TITLE: MALE ASSEMBLY

PROJECT: 24WAY HYBRID

DRAWING NUMBER: PCC0377514 REV: E

STATE: SERIAL RELEASED

SHEET 1 OF 1

PART NUMBER: See Table REV: -

FILE NAME: PCC0377514 | ECN NO: AN-50171-0 | CAT. NO. - | DOCUMENT UNDER PDC CONTROL NO MODIFICATION ALLOWED OUTSIDE | SCALE 2.00

Loc.- F2D4

# X-ON Electronics

Largest Supplier of Electrical and Electronic Components

***Click to view similar products for*** Automotive Connectors ***category:***

***Click to view products by*** APTIV ***manufacturer:***

Other Similar products are found below :

003-018-000 60403001 60993906-B 629515004020001 M902-2131 M902-2161 72.330.1035.1 73.353.4028.0 F119300-B F166900 F258300-B F358300-B F407400 F444110 F487000 F509500B-B 827153-1 8N1515-32-24P 9-1326729-8 925474-1 928905-1 964562-4 968782-1 GT17SA-8DS-HU 98891-1012 98947-1016 12004475-L 12010290 12010309-B 12015454 12020219-B 12020308 12041318-B 12052225-L 12052466 12059125 12064869 12004327-B 12010503-B 12015308 12015384 12015909 1-21030-1 12041254 12041318 12047946-B 12047957 12047957-L 12059473 12066261