Gas Discharge Tube (GDT) Data Sheet

Features

- Provide ultra-fast response to surge voltage from slow-rising surge of 100V/s to rapid-rising surge of 1KV/μs
- Stable breakdown voltage
- High insulation resistance
- Low capacitance (≤1.5pF)
- High holdover voltage
- Large absorbing transient current capability
- Micro-Gap Design
- Size: 8.0mm*8.0mm
- Storage and operating temperature: -40℃ ~ +85℃
- Meets MSL level 1, per J-STD-020
- Safety certification: E327997

Applications

- Repeaters, Modems
- Telephone Interface, Line cards
- Data communication equipment
- Line test equipment

Part Number Code

2 R □ □ □ □ □ □ — 8 — □

Electrical Characteristics
H: 2.5KA
K: 3KA
L: 5KA

Lead Type
L: Lead
M: SMD

Packing Code
No suffix: Bulk
TR: Tape & Reel packing

Electrode Numbers
2R: 2 Electrodes

DC Spark-over Voltage

Dimensions
8: 8.0mm×8.0mm

Marking

B : BrightKing Logo
2RL1000-8 : Device Marking Code
YXXX : Date Code

Dimensions

L Type

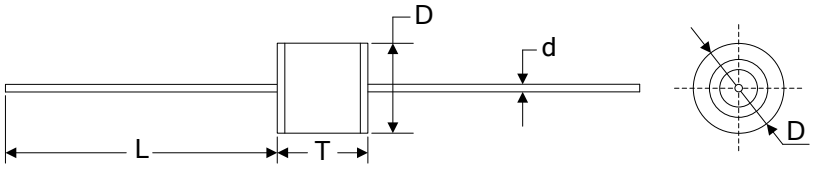

M Type

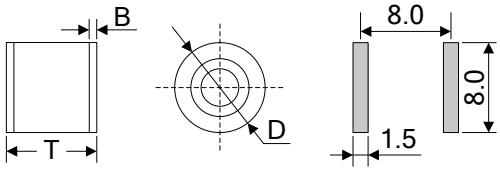

Recommended Pad Size

Symbol	Dimension (mm)	
	Spec.	Tolerance
D	8.0	+0.3, -0.5
T	8.0	+0.6, -0.1
d	0.8	±0.1
L	30.0	Max.
D	8.0	+0.3, -0.5
T	8.0	+0.6, -0.1
B	0.5	±0.4

Electrical Characteristics

Part Number ☆	DC Spark-over Voltage	Maximum Impulse Spark-over Voltage	Nominal Impulse Discharge Current	Alternating Discharge Current	Impulse Life	Minimum Insulation Resistance		Maximum Capacitance	AC Withstanding Voltage	Device Marking Code
	100V/s	1000V/μs	8/20μs 10times	50Hz,1sec	10/1000μs 100A	Test Voltage	(GΩ)	1MHz		
	(V)	(V)	(KA)	(A)	(times)	DC(V)		(pF)		
2RH1400X-8	1400±20%	2200	2.5	2.5	100	500	1.0	1.5	-	2RH1400-8
2RH1600X-8	1600±20%	2400	2.5	2.5	100	500	1.0	1.5	-	2RH1600-8
2RH2000X-8	2000±20%	3000	2.5	2.5	100	500	1.0	1.5	-	2RH2000-8
2RH2500X-8	2500±20%	3600	2.5	2.5	100	500	1.0	1.5	AC1250V,1min	2RH2500-8
2RH2700X-8	2700±20%	4000	2.5	2.5	300*	1000	1.0	1.5	AC1250V,1min	2RH2700-8
2RH3000X-8	3000±20%	4200	2.5	2.5	100	1000	1.0	1.5	AC1500V,1min	2RH3000-8
2RH3500X-8	3500±20%	5000	2.5	2.5	100	1000	1.0	1.5	AC1800V,1min	2RH3500-8
2RH3600X-8	3600±20%	5200	2.5	2.5	100	1000	1.0	1.5	AC1800V,1min	2RH3600-8
2RK2700X-8	2700±20%	4000	3.0	3.0	300*	1000	1.0	1.5	AC1250V,1min	2RK2700-8
2RK3000X-8	3000±20%	4200	3.0	3.0	300*	1000	1.0	1.5	AC1500V,1min	2RK3000-8
2RK3500X-8	3500±20%	5000	3.0	3.0	100	1000	1.0	1.5	AC1800V,1min	2RK3500-8
2RK3600X-8	3600±20%	5200	3.0	3.0	100	1000	1.0	1.5	AC1800V,1min	2RK3600-8
2RK4000X-8	4000±20%	5500	3.0	3.0	100	1000	1.0	1.5	AC2000V,1min	2RK4000-8

Electrical Characteristics

Part Number ☆	DC Spark-over Voltage	Maximum Impulse Spark-over Voltage	Nominal Impulse Discharge Current	Alternating Discharge Current	Impulse Life	Minimum Insulation Resistance		Maximum Capacitance	AC Withstanding Voltage	Device Marking Code
	100V/s	1000V/μs	8/20μs 10times	50Hz,1sec	10/1000μs 100A	Test Voltage	(GΩ)	1MHz		
	(V)	(V)	(KA)	(A)	(times)	DC(V)		(pF)		
2RL1000X-8	1000±20%	1400	5.0	5.0	100	500	1.0	1.5	-	2RL1000-8
2RL1400X-8	1400±20%	2200	5.0	5.0	100	500	1.0	1.5	-	2RL1400-8
2RL1600X-8	1600±20%	2400	5.0	5.0	100	500	1.0	1.5	-	2RL1600-8
2RL2000X-8	2000±20%	3000	5.0	5.0	100	500	1.0	1.5	-	2RL2000-8
2RL2500X-8	2500±20%	3600	5.0	5.0	100	1000	1.0	1.5	AC1250V,1min	2RL2500-8

* Measured with an 8/20μs waveform, 100A.

☆X may be L or M.

Electrical Ratings

Items	Test Condition/Description	Requirement
DC Spark-over Voltage	The voltage is measured with voltage ramp dv/dt=100V/s.	To meet the specified value
Maximum Impulse Spark-over Voltage	The maximum impulse spark-over voltage is measured with voltage ramp dv/dt=1000V/μs.	
Impulse Discharge Current	Maximum 8/20μs surge current that can be applied between two electrodes, 5 positive and 5 negative surges, with 3 minutes interval time, without causing the DC spark-over voltage to change more than 25% from its initial value. 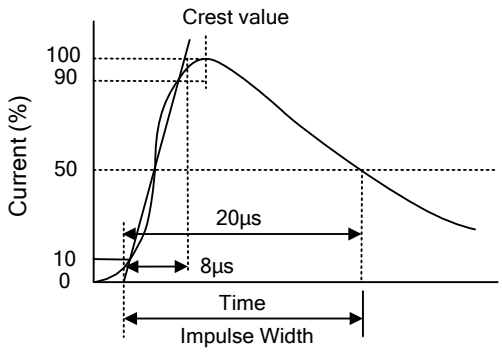	
Alternating Discharge Current	Rated RMS value of AC current at 50Hz, 1 sec. for 10 times with interval time 3 min. DC spark-over voltage shall not change more than ±25% from its initial value.IR＞10^8 ohms	
Insulation Resistance	The resistance of gas tube shall be measured between two electrodes.	
Capacitance	The capacitance of gas tube shall be measured between two electrodes. Test frequency: 1MHz	

Recommended Soldering Conditions

Wave Soldering

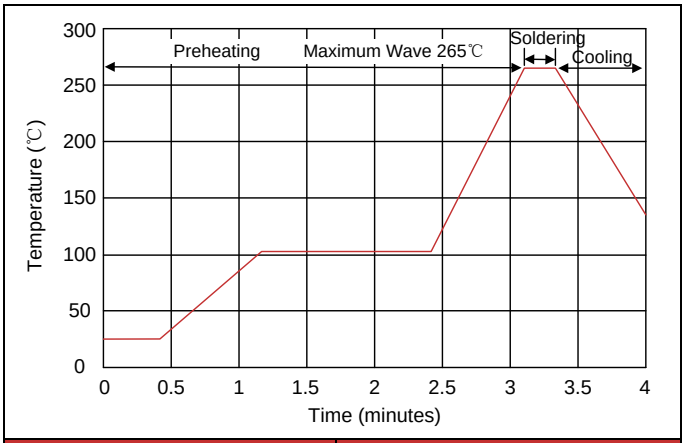

Item	Conditions
Peak Temperature	265℃
Dipping Time	10 seconds
Soldering	1 time

Reflow Soldering

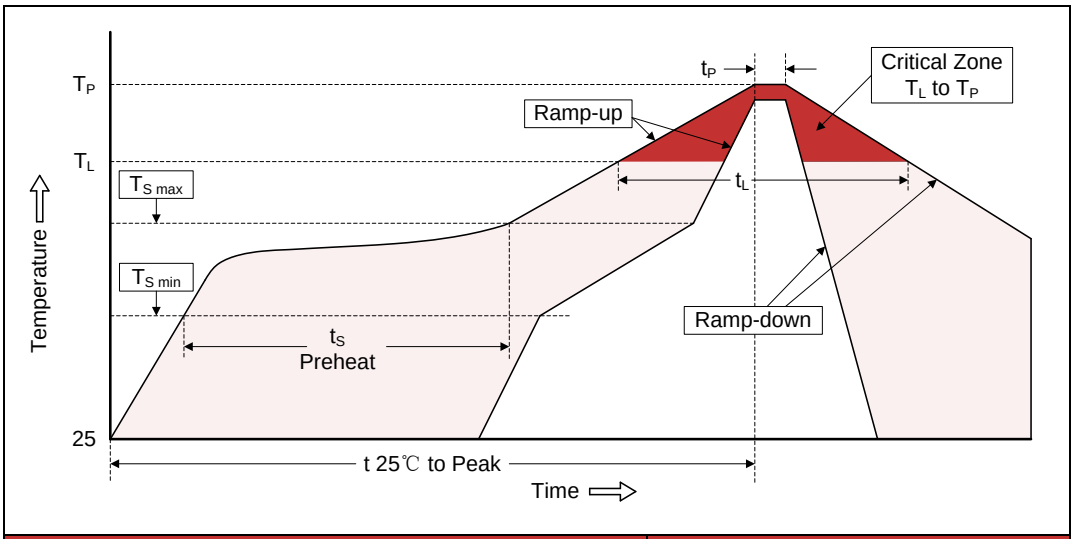

Profile Feature	Pb-Free Assembly
Average ramp-up rate (T_L to T_P)	3℃/second max.
Preheat -Temperature Min ($T_{S\,min}$) -Temperature Max ($T_{S\,max}$) -Time (min to max) (ts)	 150℃ 200℃ 60-180 seconds
$T_{S\,max}$ to T_L -Ramp-up Rate	 3℃/second max.
Time maintained above: -Temperature (T_L) -Time (t_L)	 217℃ 60-150 seconds
Peak Temperature (T_P)	260℃
Time within 5℃ of actual Peak Temperature (t_P)	20-40 seconds
Ramp-down Rate	6℃/second max.
Time 25℃ to Peak Temperature	8 minutes max.

Packaging

Axial Packing (Bulk)

Skin packing

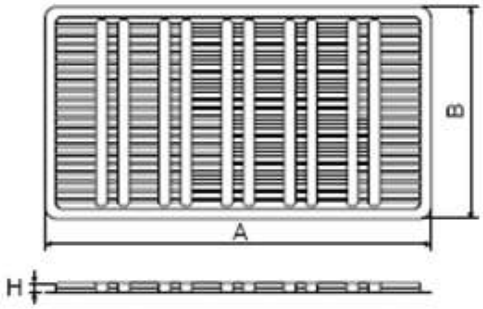

Symbol	Dimension (mm)	
	Spec.	Tolerance
A	265.0	±5.0
B	146.0	±5.0
H	9.5	±0.5
Quantity: 100pcs		

Inner box

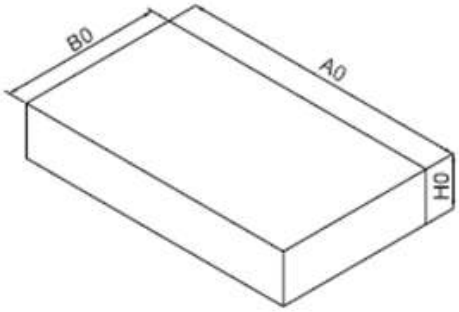

A0	270.0	±2.0
B0	150.0	±2.0
H0	50.0	±2.0
Quantity: 500pcs		

Axial Packing (Tape & Reel)

Tape

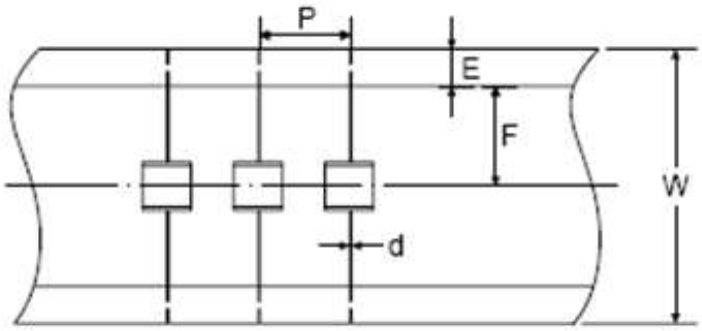

Symbol	Dimension (mm)	
	Spec.	Tolerance
P	10.0	±0.5
W	65.0	±1.0
E	6.0	±0.5
F	26.5	±0.5
d	0.8	±0.1

Reel

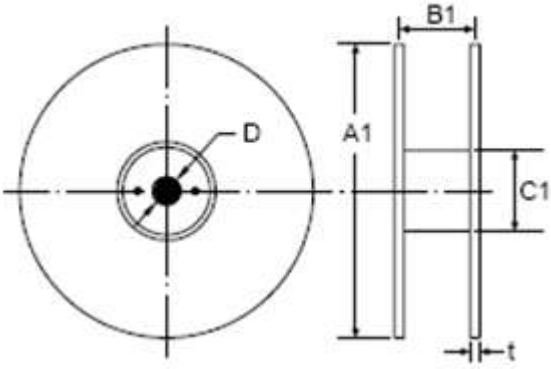

A1	330.0	±2.0
B1	70.0	±2.0
C1	82.0	±2.0
D	25.0	±0.5
t	2.0	±0.2
Quantity: 500pcs		

Packaging

SMD Packing (Tape & Reel)

Tape

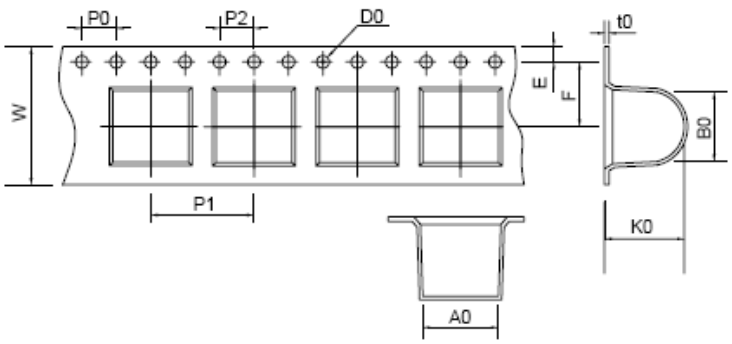

Symbol	Dimension (mm)	
	Spec.	Tolerance
W	16.00	±0.20
P0	4.00	±0.10
P1	12.00	±0.20
P2	4.00	±0.10
D0	1.55	±0.10
E	1.75	±0.10
F	7.50	±0.10
A0	8.80	±0.10
K0	8.30	±0.10
B0	8.30	±0.10
t0	0.50	±0.10

Reel

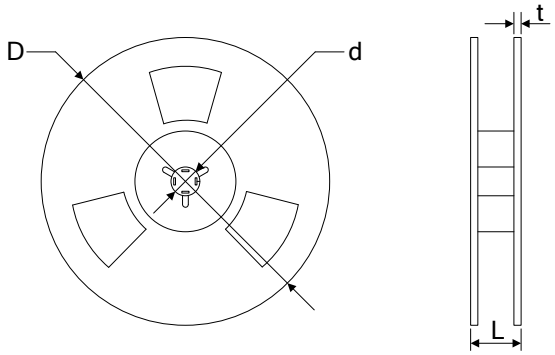

D	330.00	±2.00
d	13.00	±0.50
L	20.00	±2.00
t	2.00	±0.20

Quantity: 500pcs